ILBRO

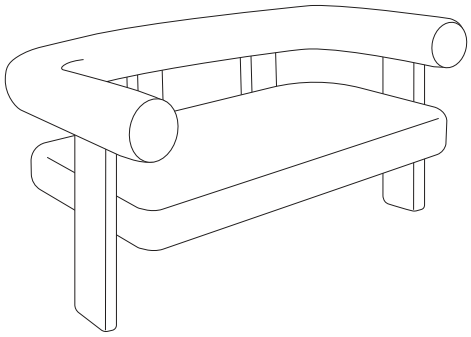

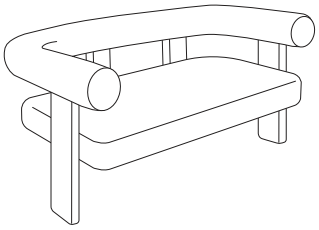

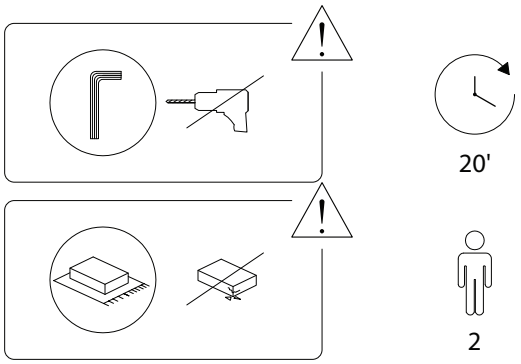

1/4

2533/ILBRO/280325/

A	B	C	D	E	F
x 1	x 1	x 2	x 1	x 1	x 4

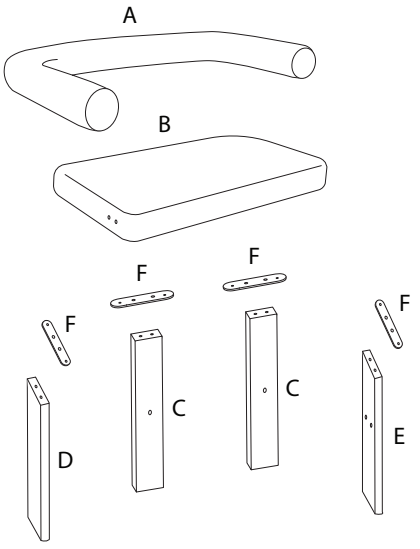

G	H	I	J	K	L
M6 x 20	M6 x 25	M8 x 40			
x 8	x 8	x 6	x 6	x 4	x 1

2/4

2533/ILBRO/280325/

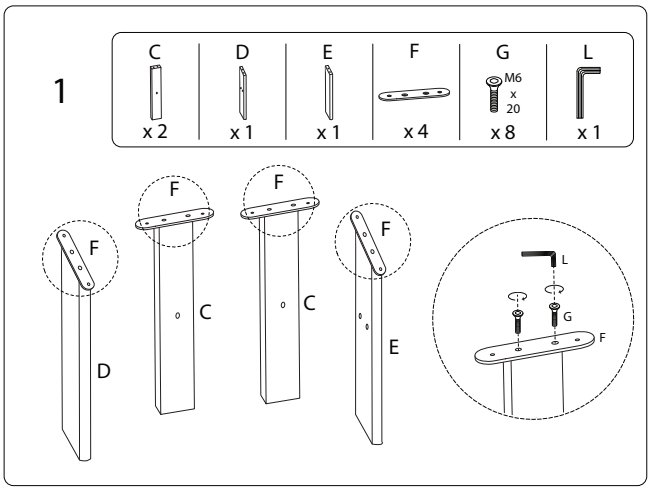

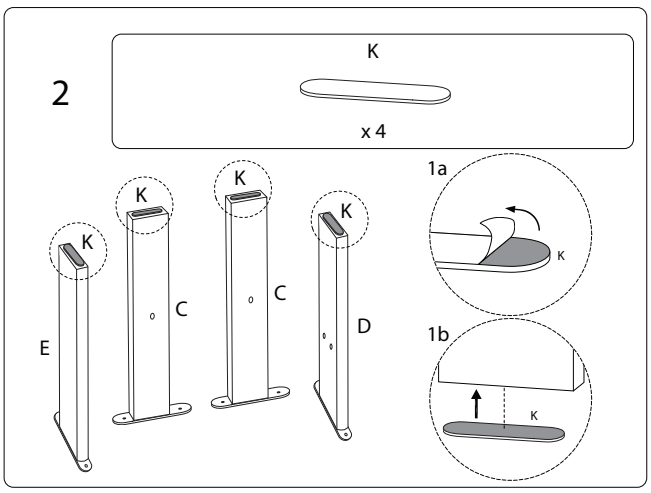

3/4

2533/ILBRO/280325/

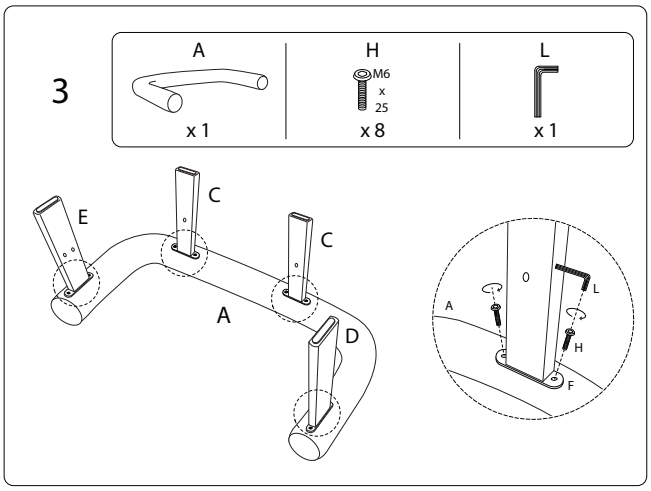

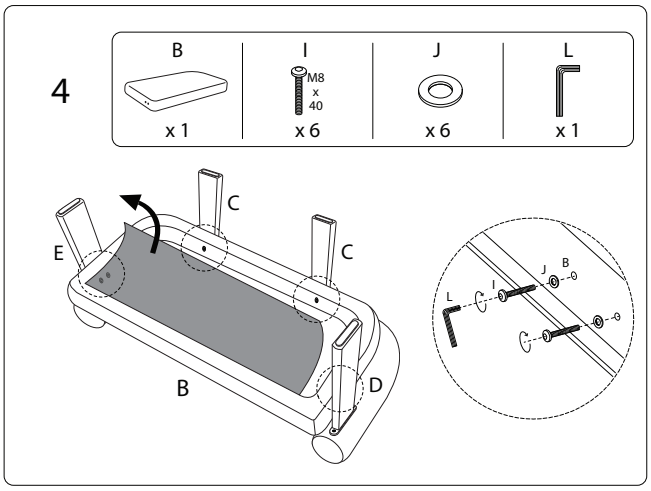

2533/ILBRO/280325/