ANAIS



1/11



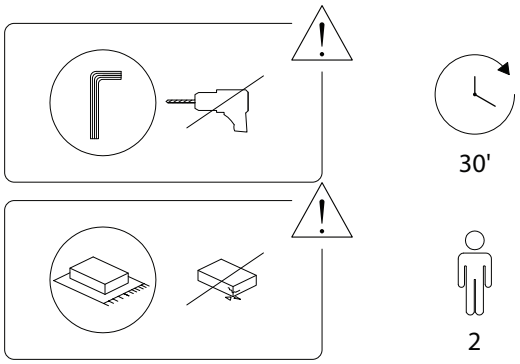

2/11

1	2	3	4	5
x 2	x 2	x 2	x 1	x 1

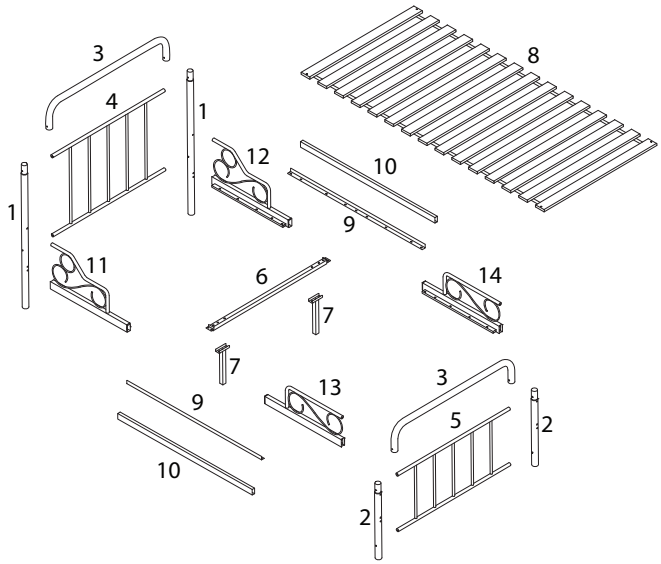

6	7	8	9	10
x 1	x 2	x 1	x 2	x 2

3/11

11	12	13	14
x 1	x 1	x 1	x 1

A	B	C	D
M6 x 15	M6 x 55	M8 x 55	M6 x 35
x 14	x 12	x 8	x 4

E	F	G
M6 x 28		
x 4	x 20	x 1

4/11

2626/ANAIS/310326/

!

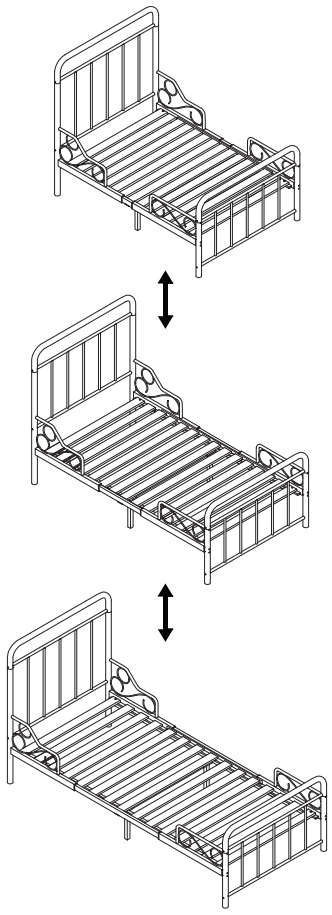

5/11

2626/ANAIS/310326/

1

1	2	3
x 2	x 2	x 2

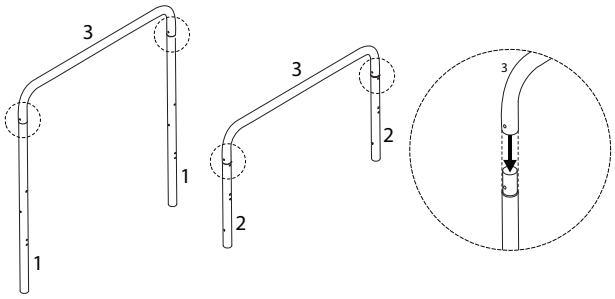

2

4	5	B	F	G
x 1	x 1	M6 x 55 x 8	x 8	x 1

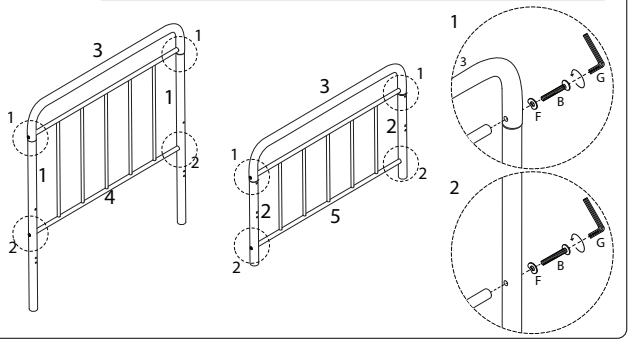

6/11

2626/ANAIS/310326/

3

6	7	D	G
x 1	x 2	M6 x 35 x 4	x 1

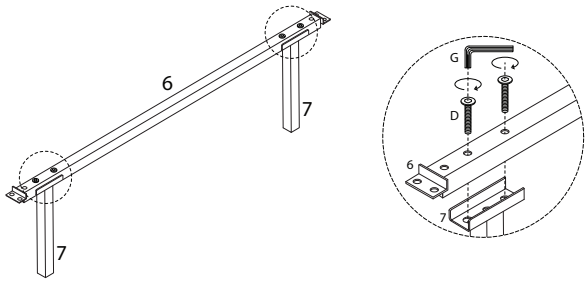

4

10	11	12	13	14
x 2	x 1	x 1	x 1	x 1

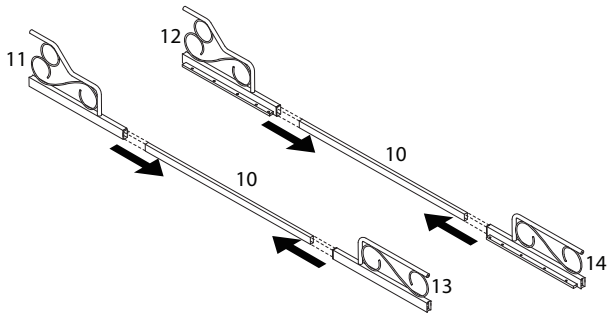

7/11

2626/ANAIS/310326/

5

9	A	G
x 2	M6 x 15 x 8	x 1

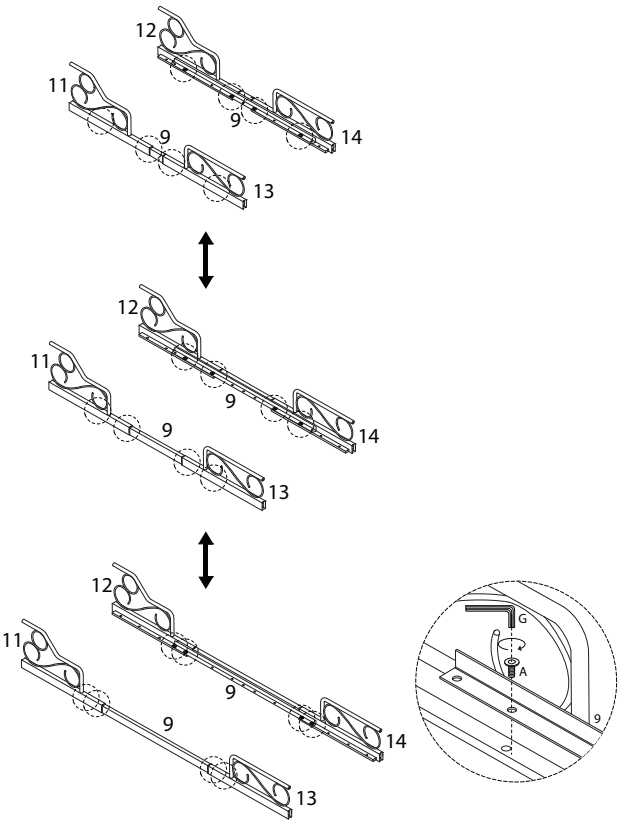

8/11

2626/ANAIS/310326/

6

B	C	F	G
M6 x 55	M8 x 55		
x 4	x 8	x 12	x 1

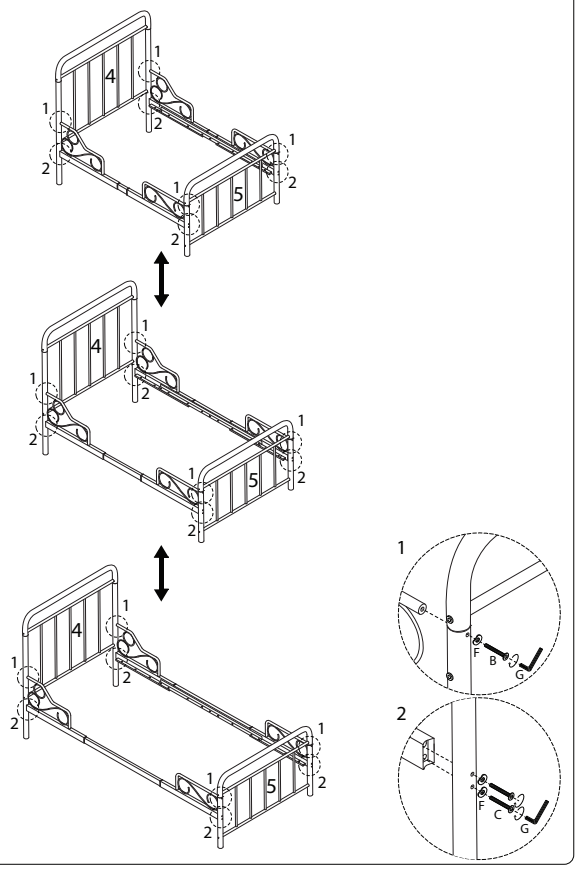
4
5
1
2
1
2
1
2