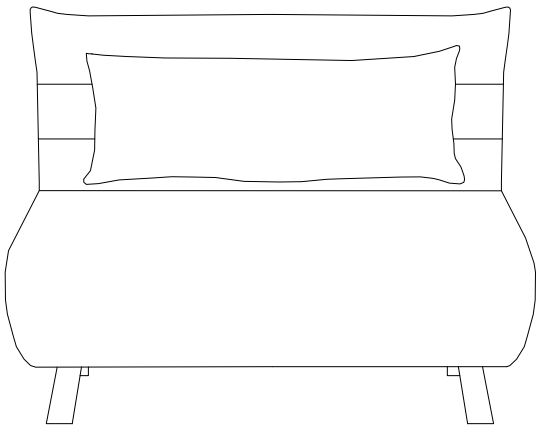

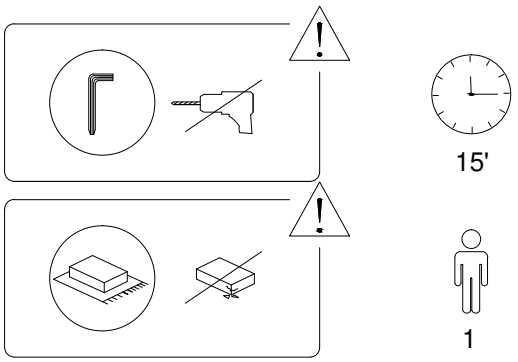

15'

1

1/5

A	B	C
x 1	x 1	x 4

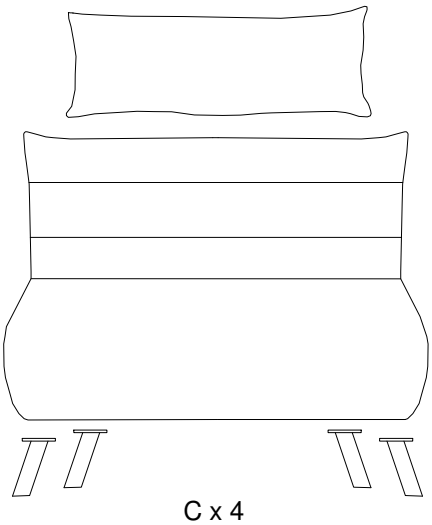

B

A

C x 4

D	E
M6 x 23	
x 16	x 1

2/5

1

A	C	D	E
x 1	x 4	M6 x 23 x 16	x 1

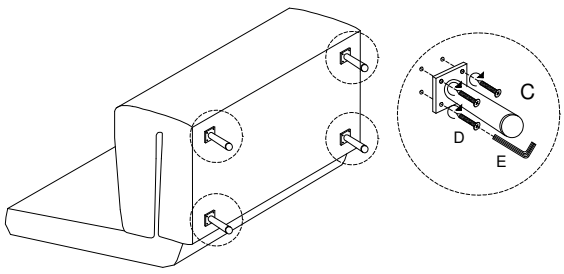

2

B
x 1

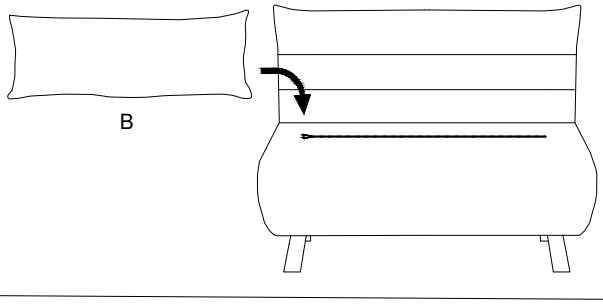

3/5

3

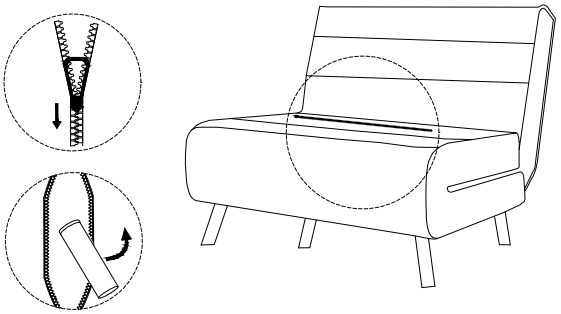

4

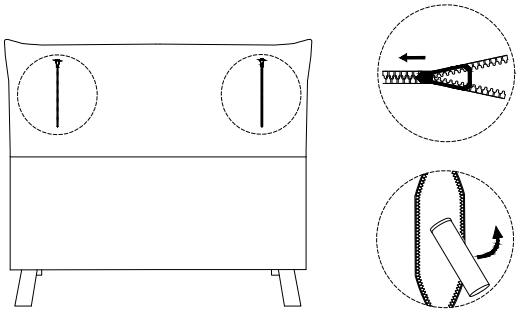

4/5

5

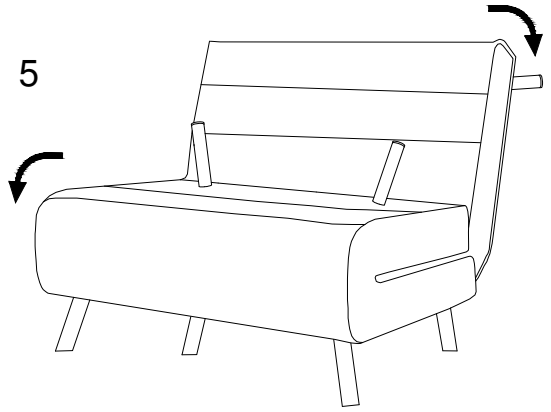

6

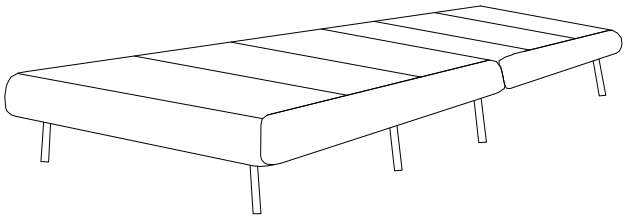

141/SETTEN/230518/