# UNSTAD

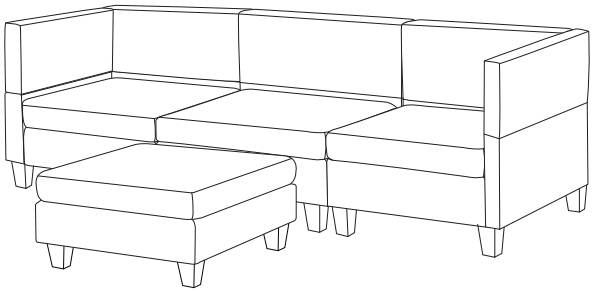

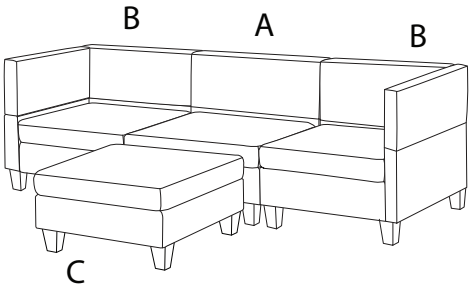


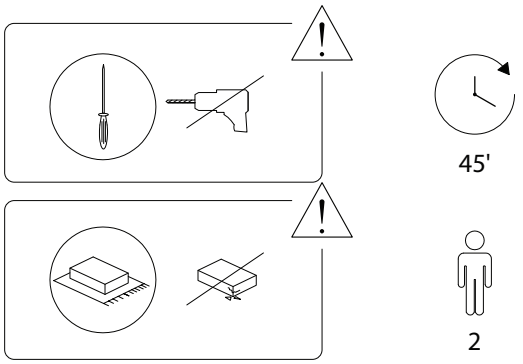




600/UNSTAD/280225/

A

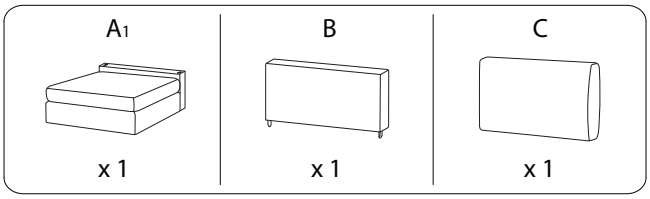


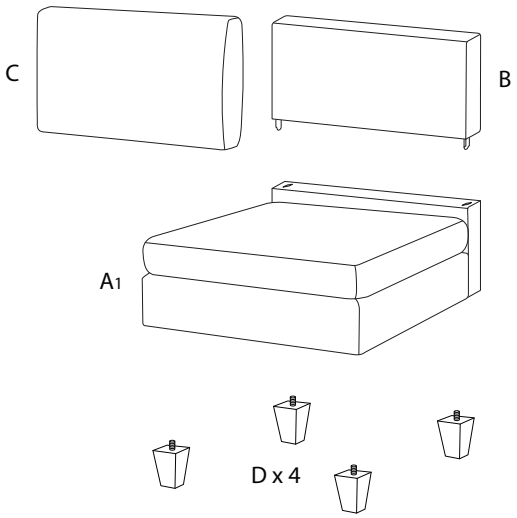


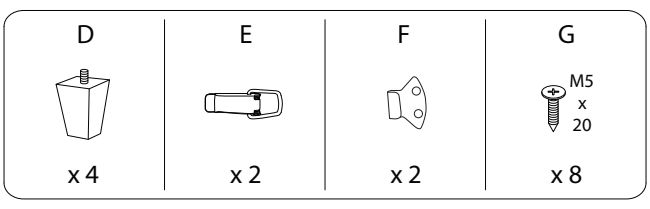




600/UNSTAD/280225/

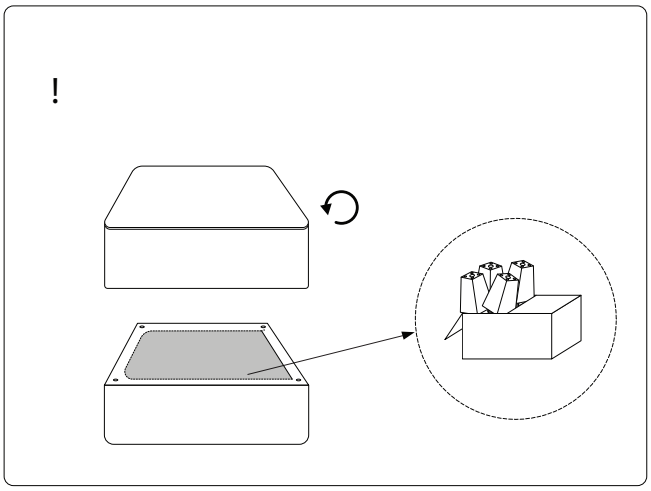


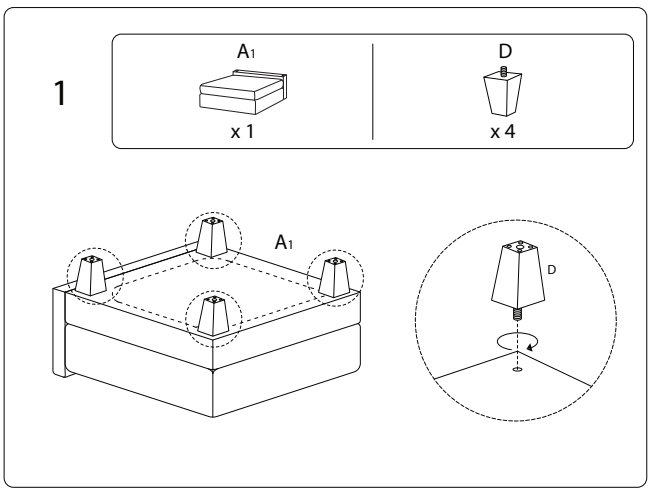




600/UNSTAD/280225/

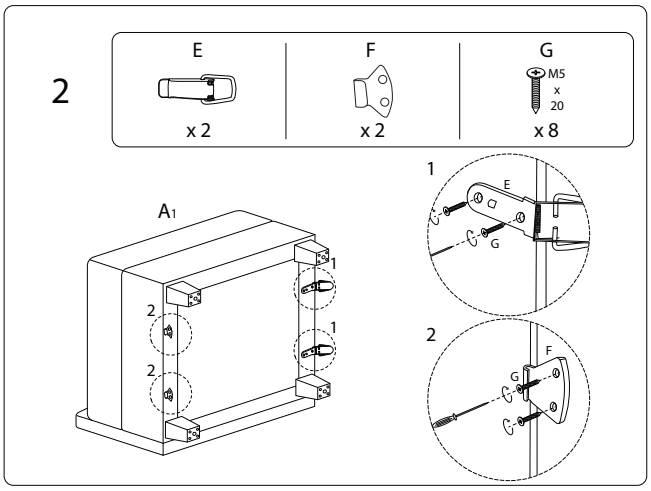


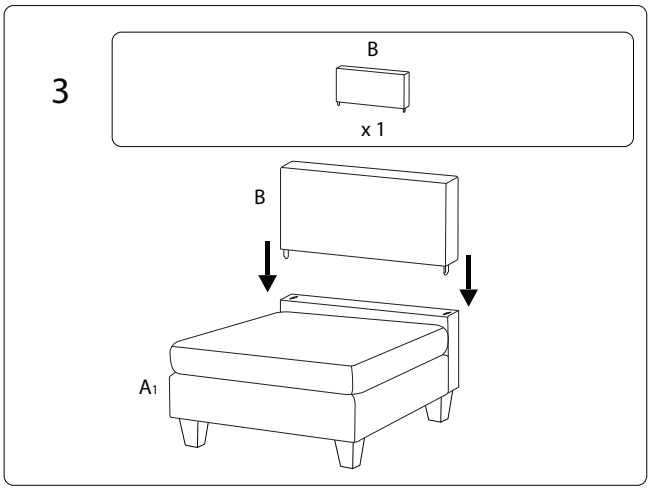




600/UNSTAD/280225/

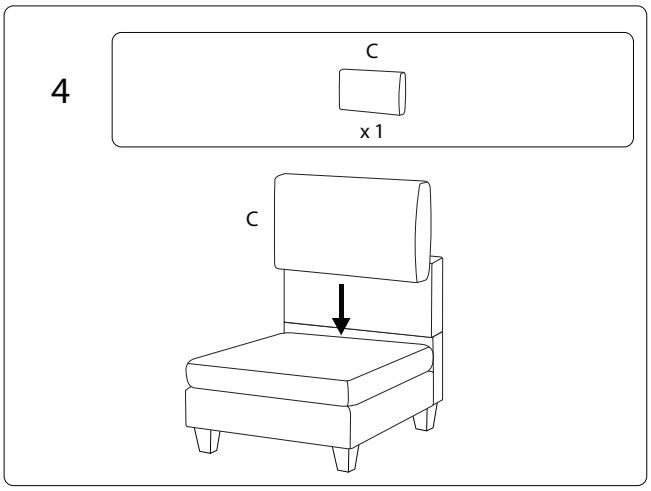




600/UNSTAD/280225/

B

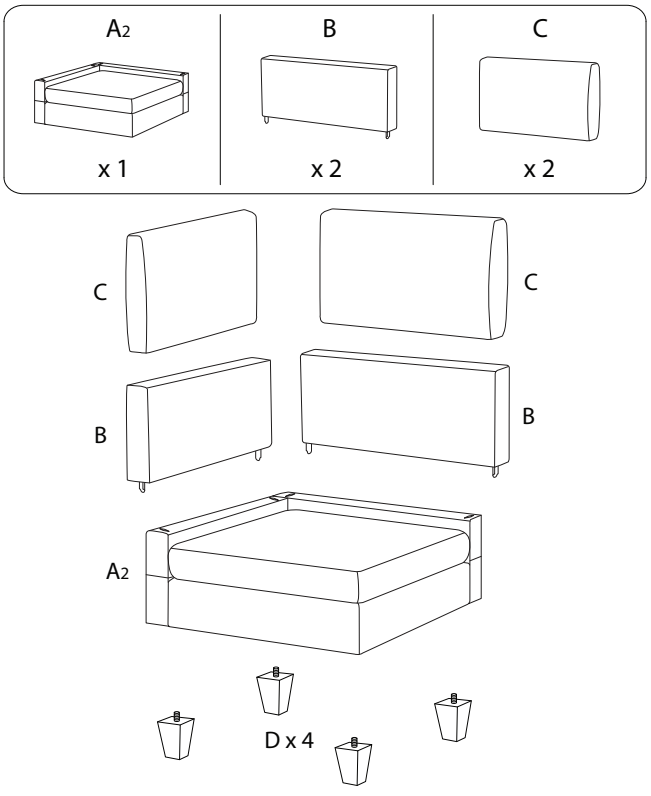


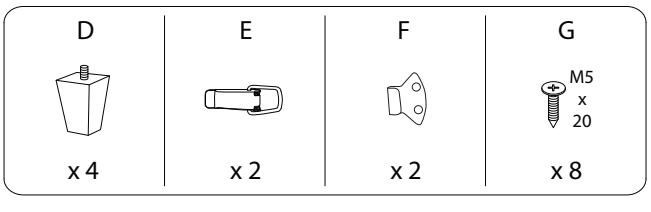




600/UNSTAD/280225/

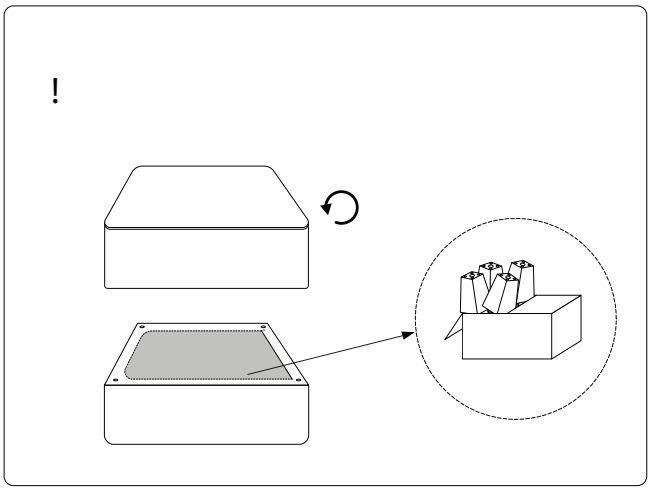


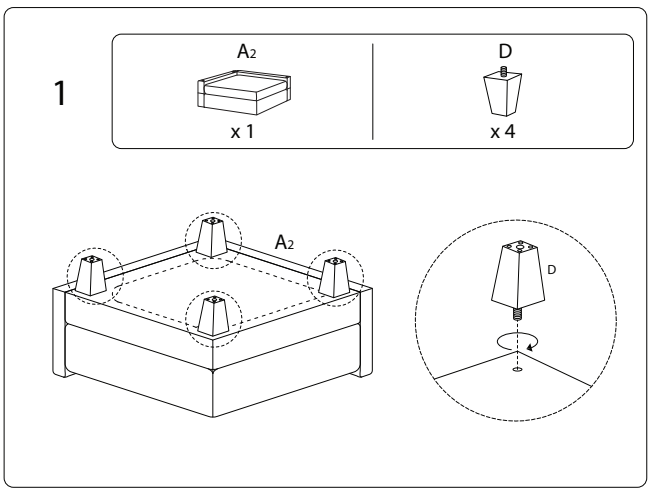




600/UNSTAD/280225/

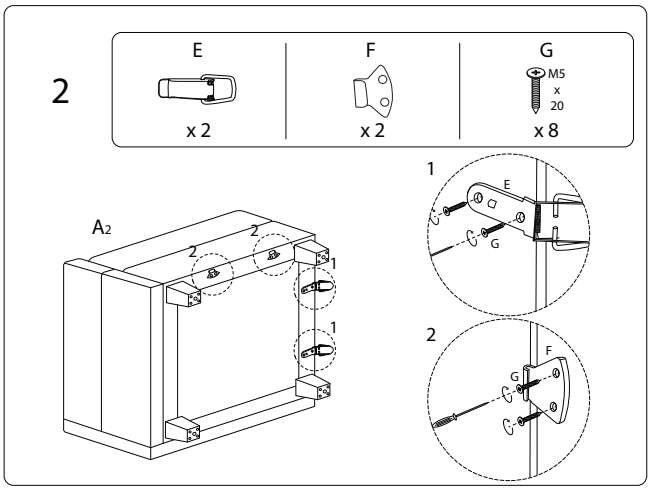
2
E
x 2
F
x 2
G
M5
x
20
x 8
A2
2
2
1
1
1
E
G
2
F
G

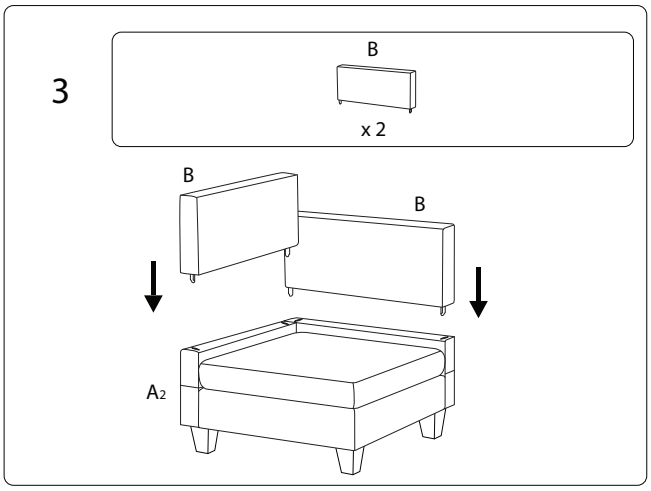
3
B
x 2
B
B
A2





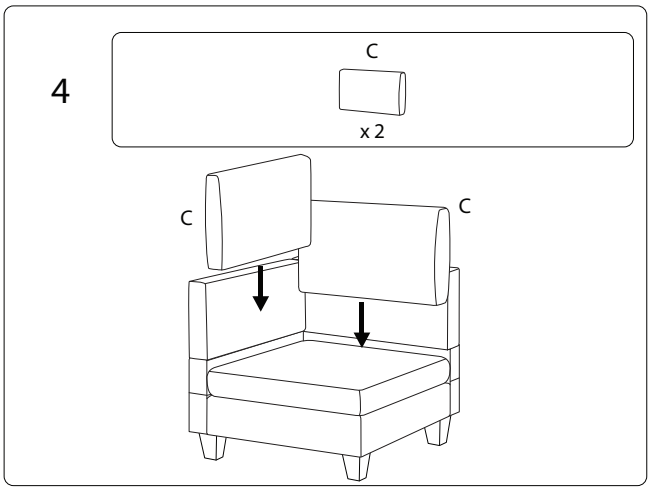
4
C
x 2
C
C





C

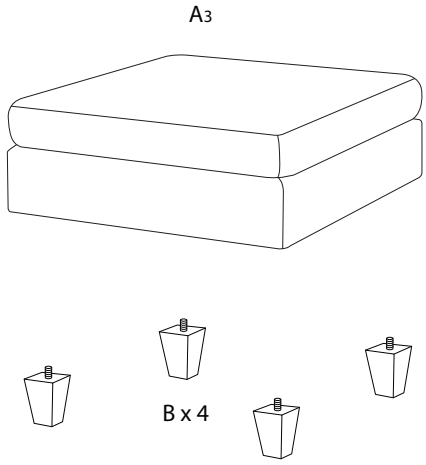
A3
B x 4

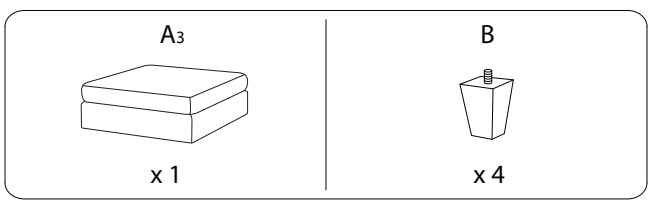
A3
x 1
B
x 4





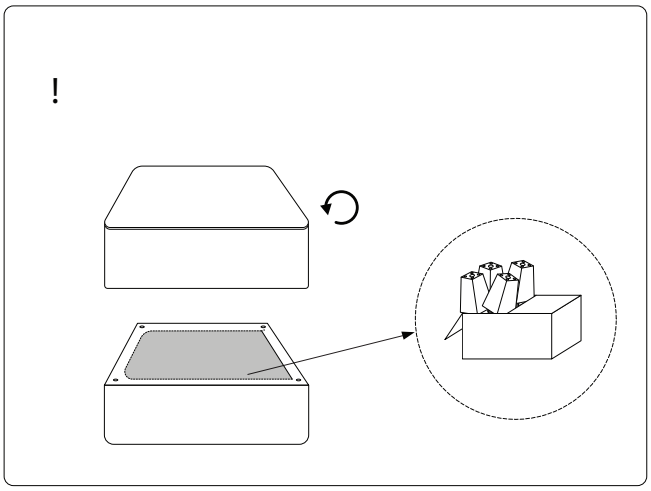
!

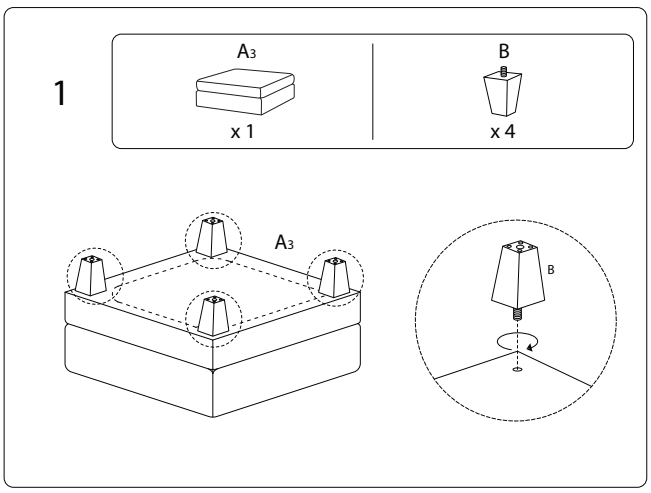
1
A3
x 1
B
x 4
A3
B

!

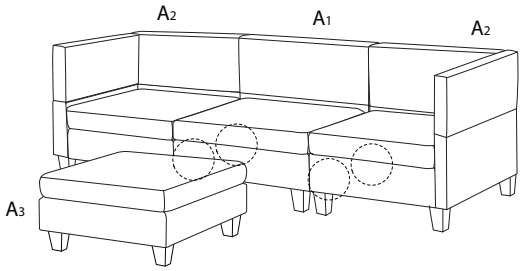


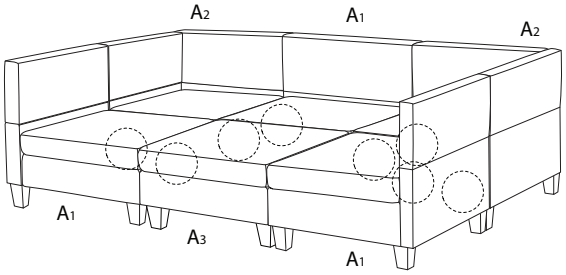


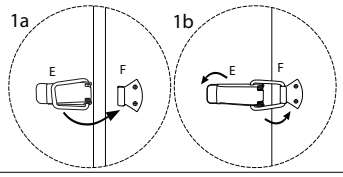




600/UNSTAD/280225/