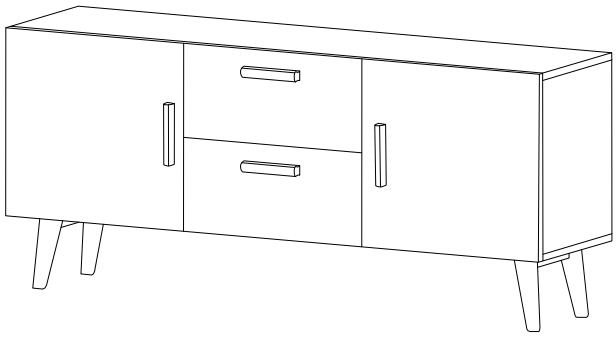

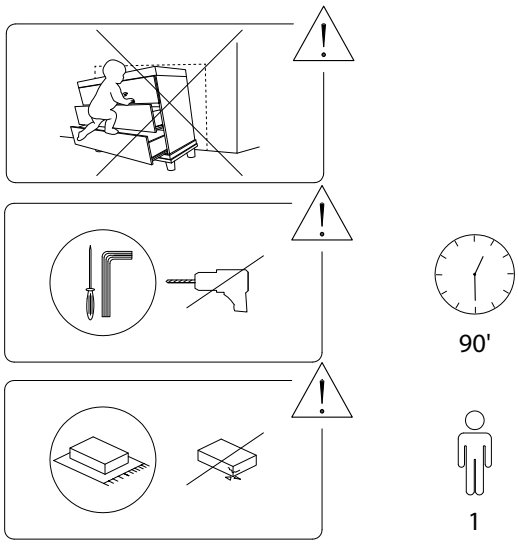
90'
1

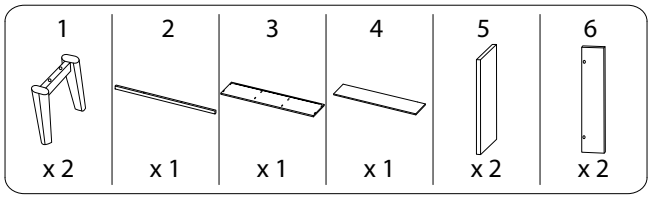
1
x 2
2
x 1
3
x 1
4
x 1
5
x 2
6
x 2

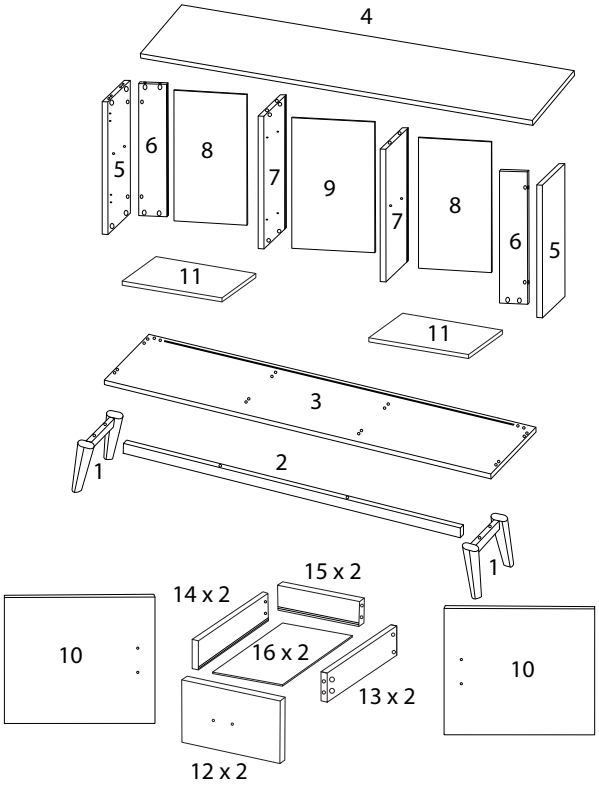
4
5
6
8
7
9
7
8
6
5
11
11
3
1
2
1
15 x 2
14 x 2
10
16 x 2
13 x 2
10
12 x 2

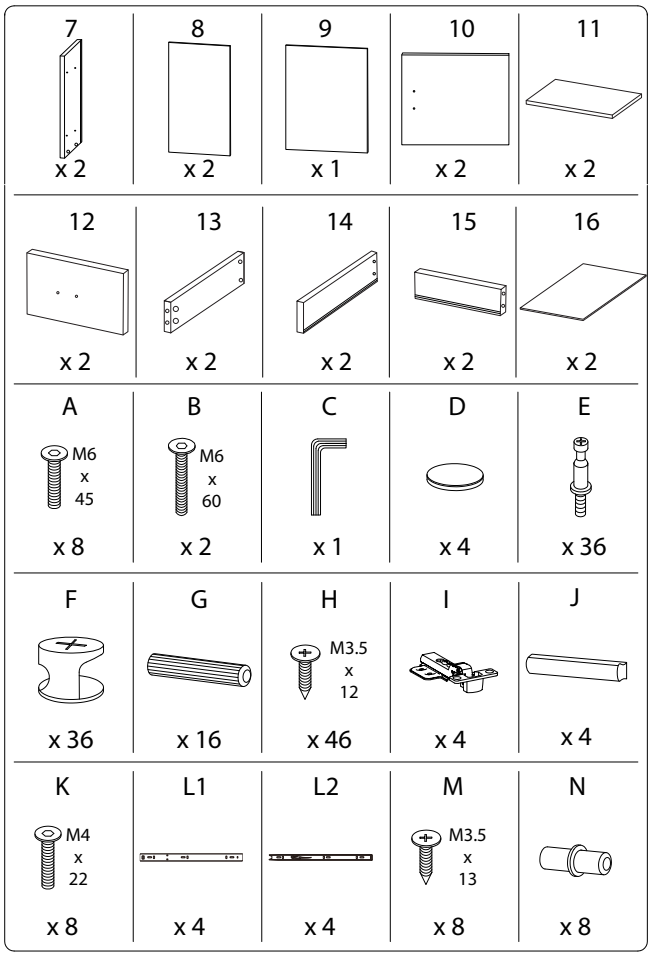
7
x 2
8
x 2
9
x 1
10
x 2
11
x 2
12
x 2
13
x 2
14
x 2
15
x 2
16
x 2
A
M6
x
45
x 8
B
M6
x
60
x 2
C
x 1
D
x 4
E
x 36
F
x 36
G
x 16
H
M3.5
x
12
x 46
I
x 4
J
x 4
K
M4
x
22
x 8
L1
x 4
L2
x 4
M
M3.5
x
13
x 8
N
x 8

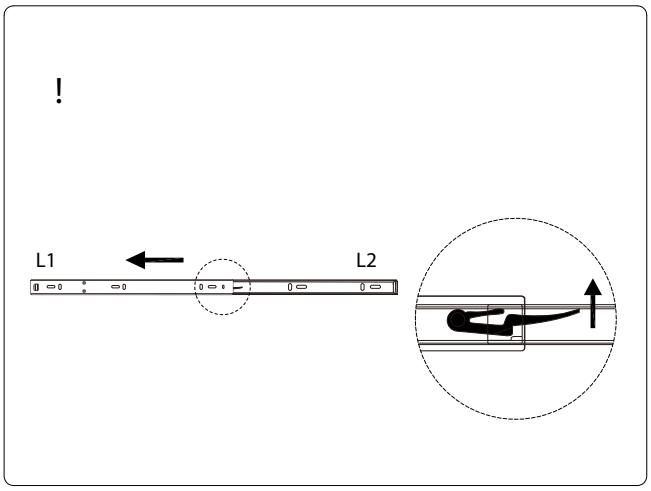
!
L1
L2

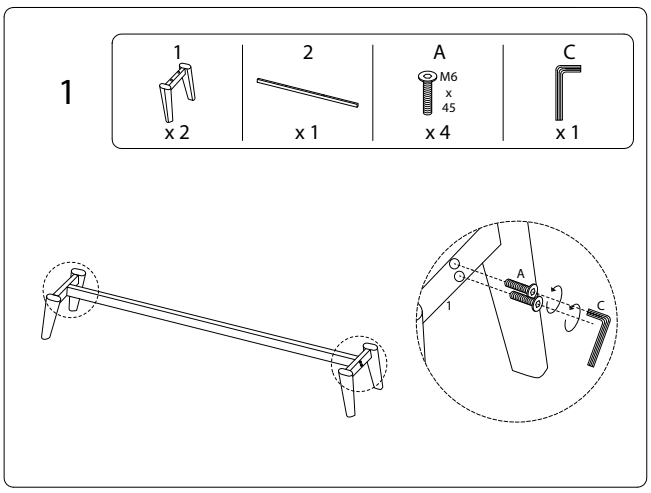
1
1
x 2
2
x 1
A
M6
x
45
x 4
C
x 1
A
1
C

2

3	A	B	C
x 1	M6 x 45 x 4	M6 x 60 x 2	x 1

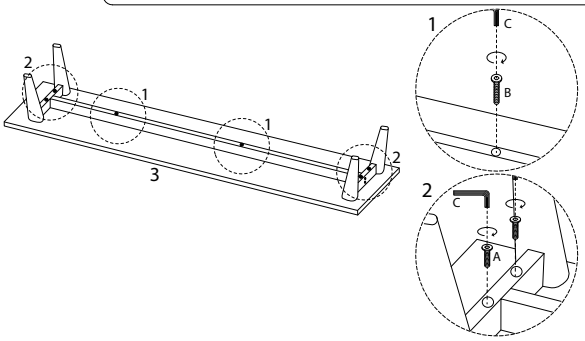

3

D
x 4

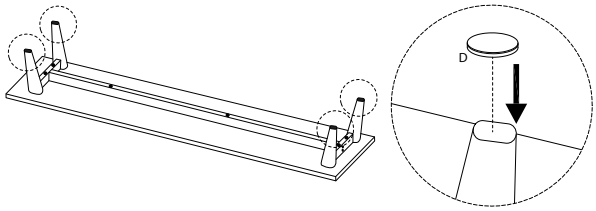

4

4	E	G
x 1	x 12	x 8

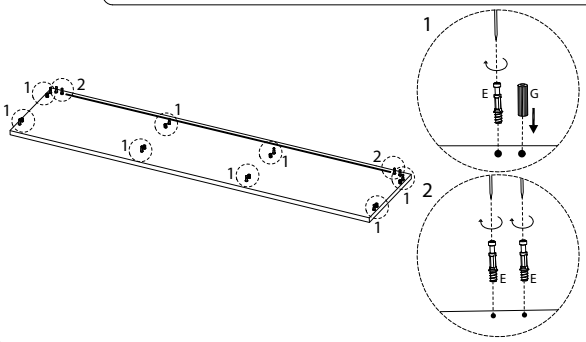

5

E	G
x 12	x 8

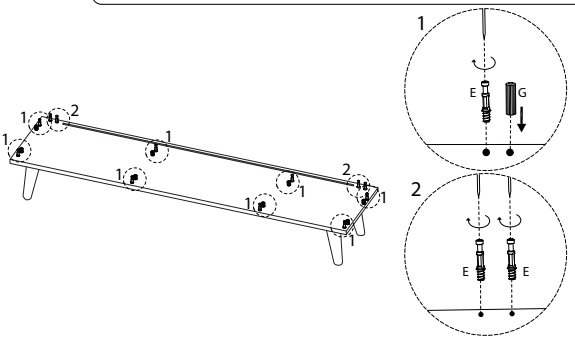

6 x 2

5	E
x 1	x 2

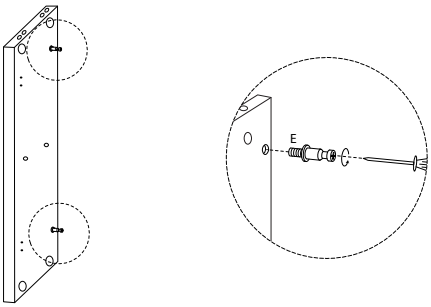

8 x 2

F
x 2

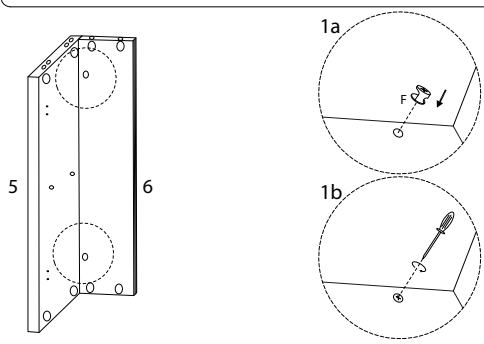

7 x 2

6
x 1

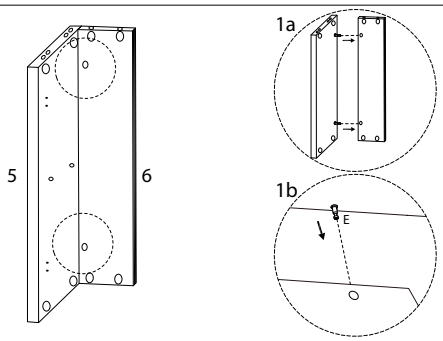

9 x 2

7	H	L1
x 1	M3.5 x 12 x 6	x 2

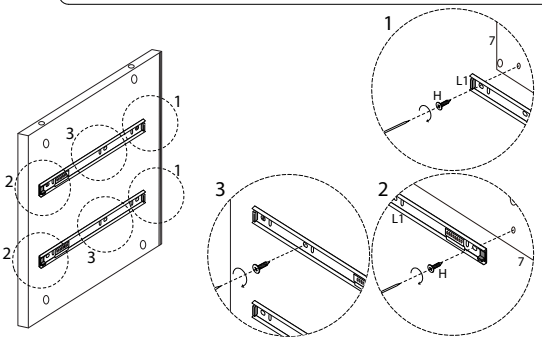

10

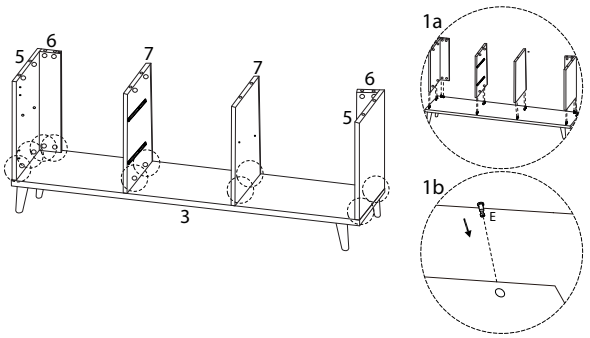

11

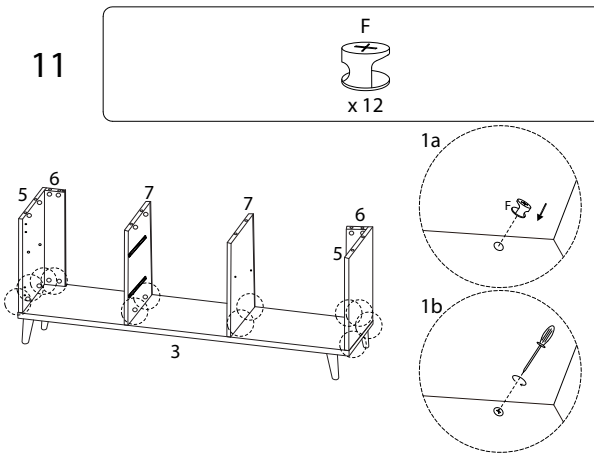

12

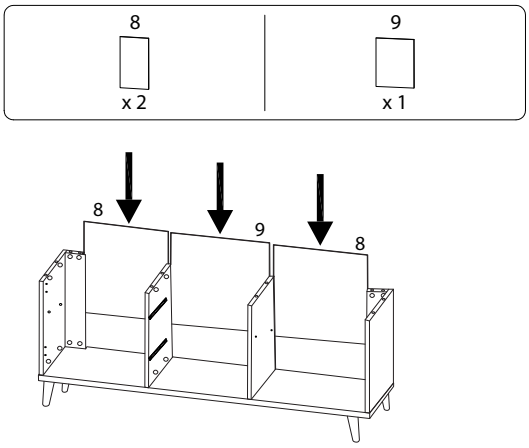

13

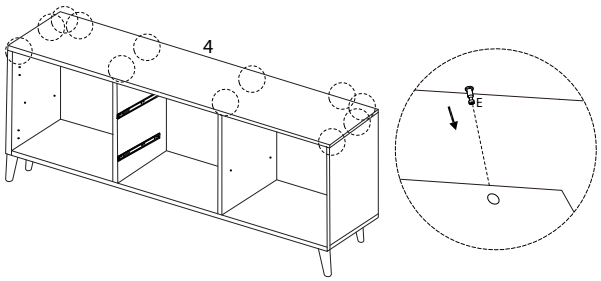

14

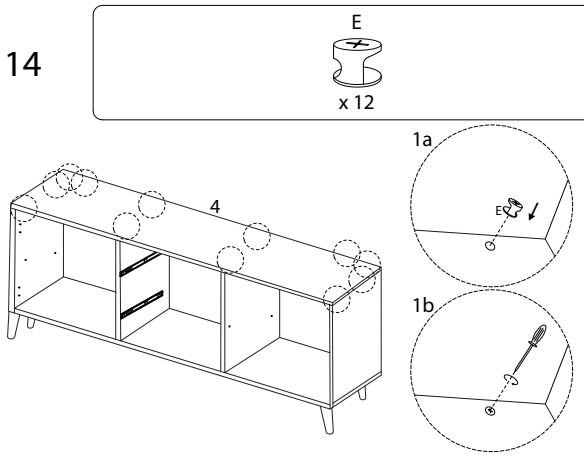

15 x 2

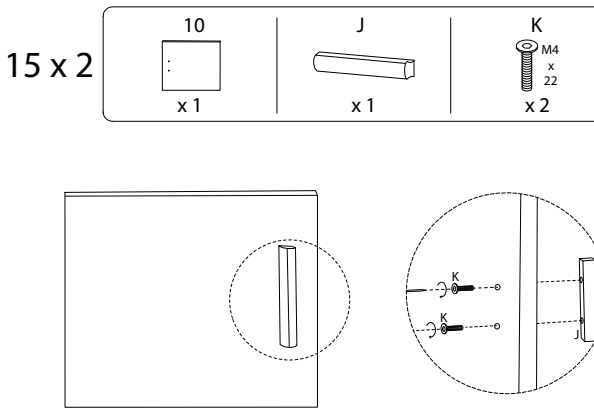

16 x 2

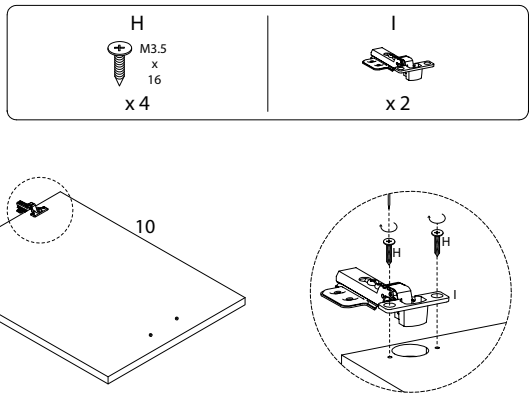

17

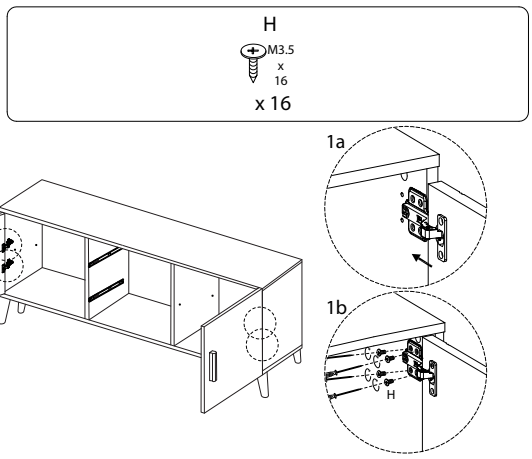

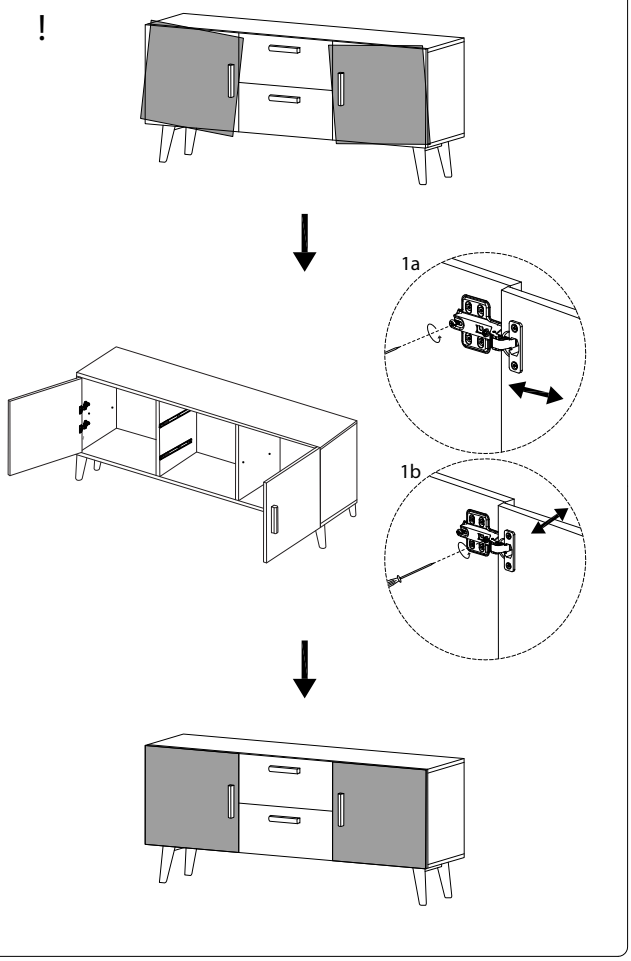
!
1a
1b

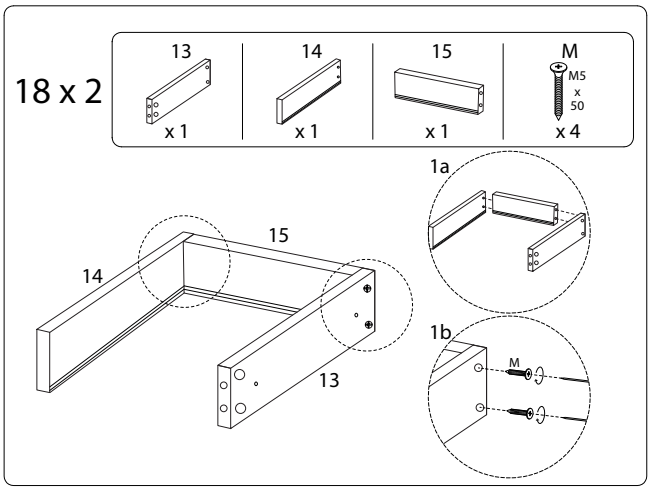
18 x 2
13
x 1
14
x 1
15
x 1
M
M5
x
50
x 4
1a
15
14
13
1b
M

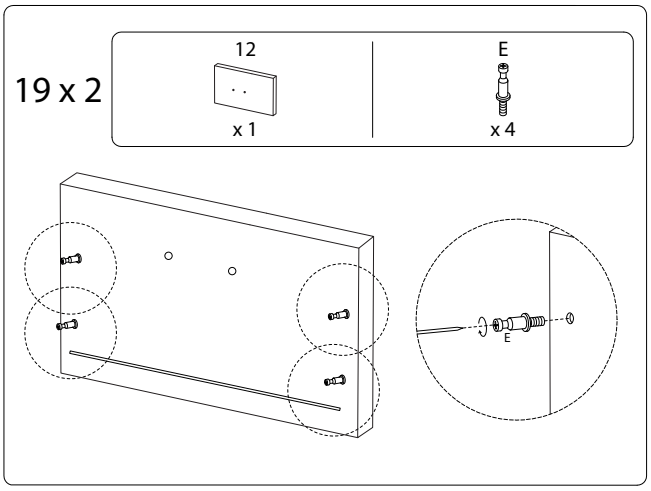
19 x 2
12
x 1
E
x 4
E

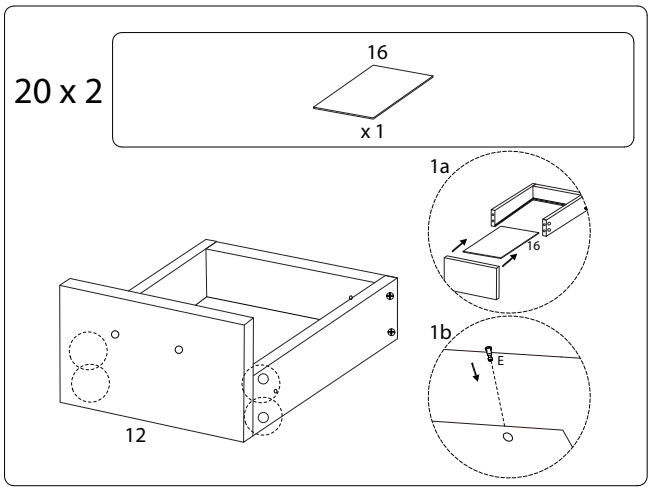
20 x 2
16
x 1
1a
16
1b
E
12

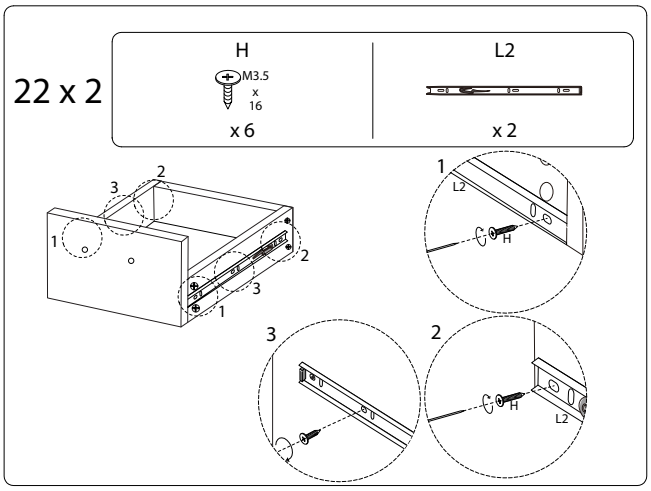
22 x 2
H
M3.5
x
16
x 6
L2
x 2
1
2
3
L2
H

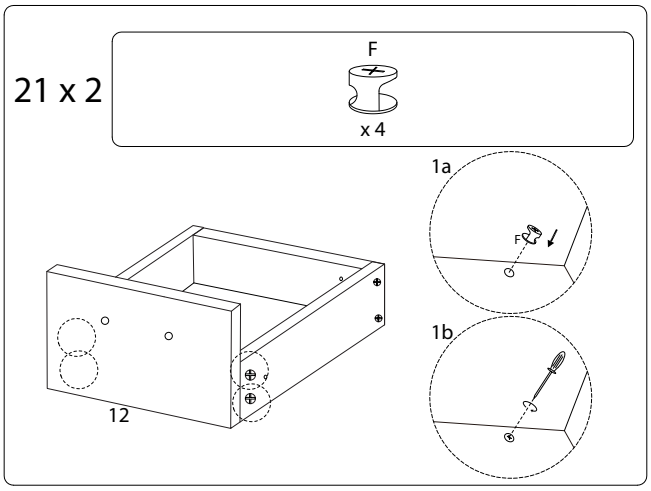
21 x 2
F
x 4
1a
F
1b
12

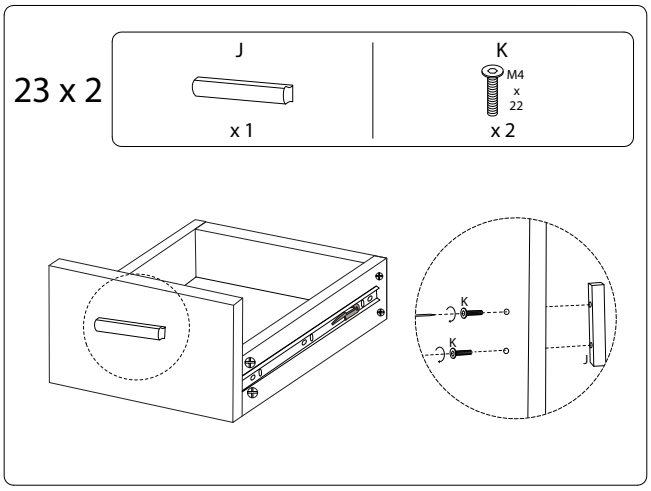
23 x 2
J
x 1
K
M4
x
22
x 2
K
J

24

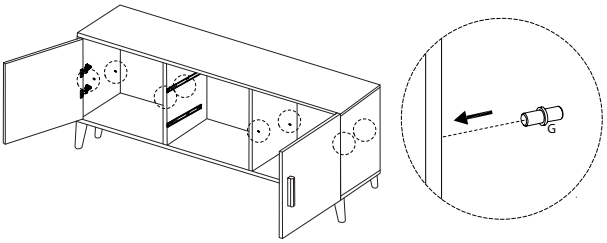

25

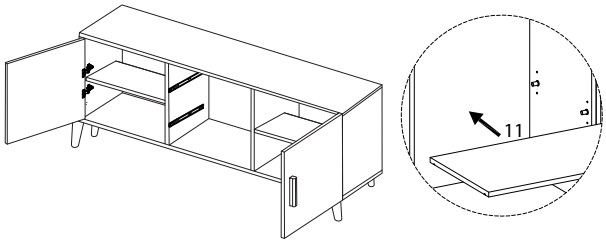
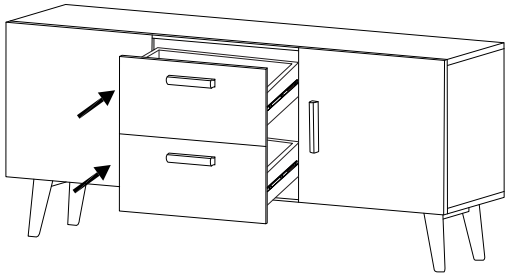
26