YARRA

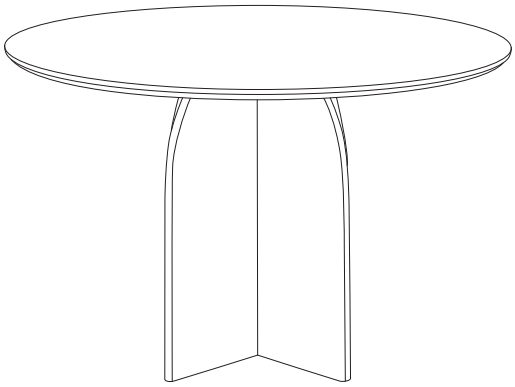

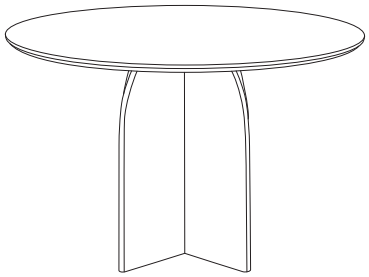

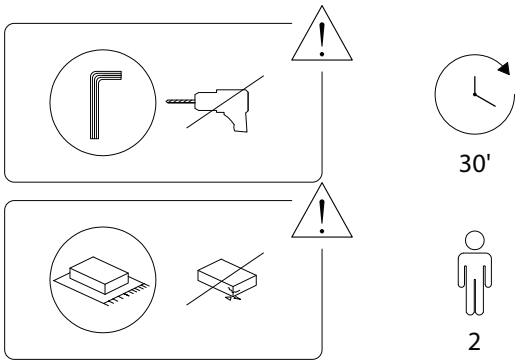

2302/YARRA/070426/

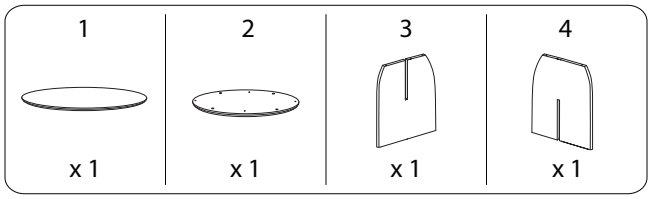

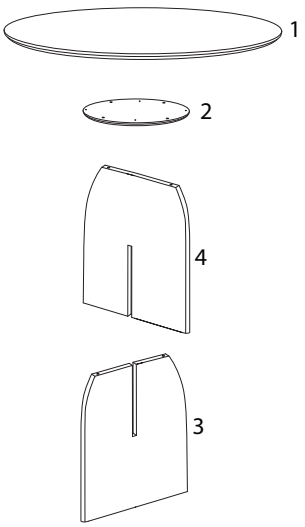

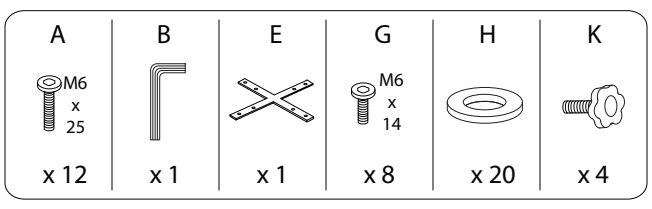

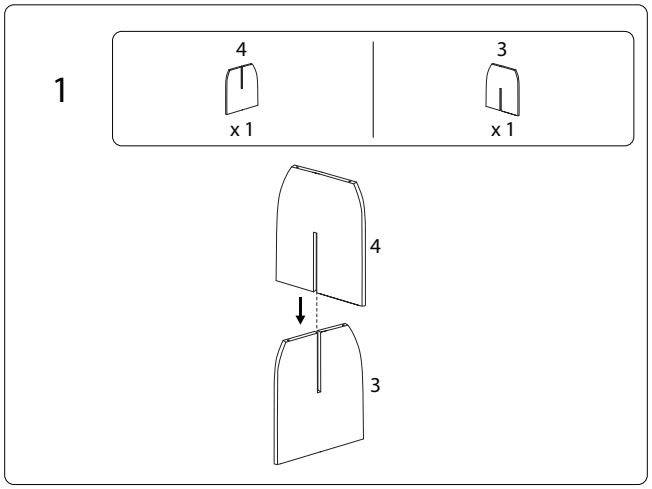

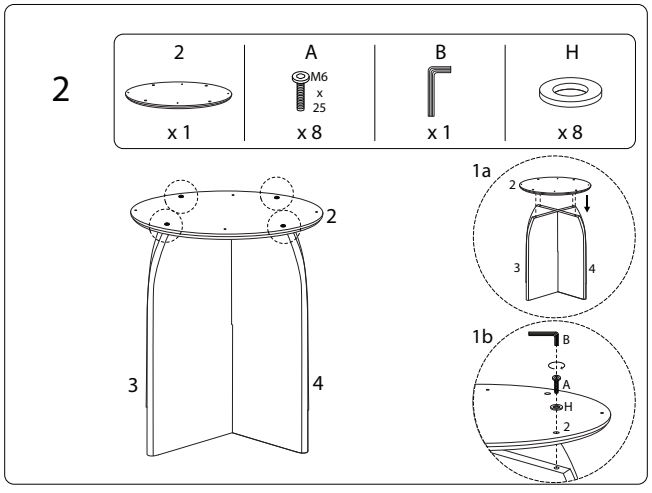

2302/YARRA/070426/

2302/YARRA/070426/

3

1	A	B	H
x 1	M6 x 25 x 4	x 1	x 4

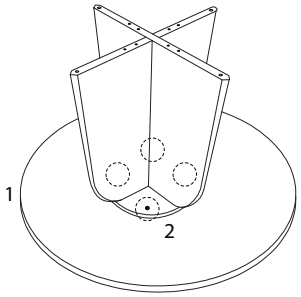

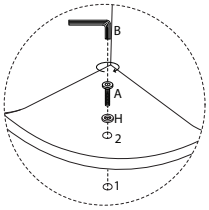

4

B	E	G	H	K
x 1	x 1	M6 x 14 x 8	x 8	x 4

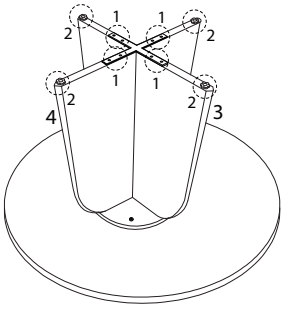

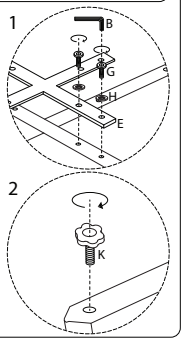

2302/YARRA/070426/