BERBICE

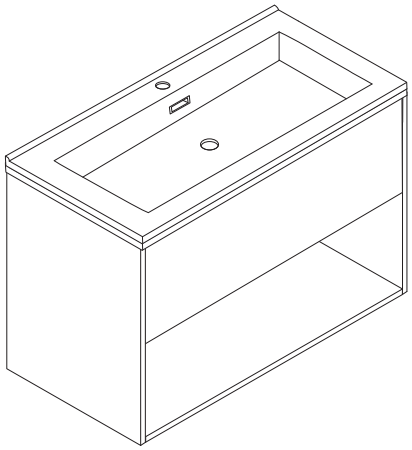

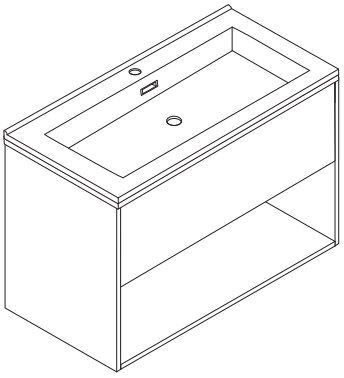

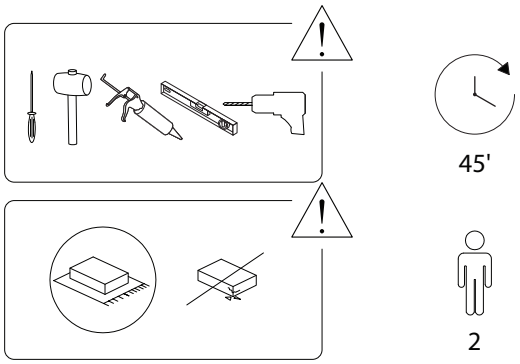
45'
2

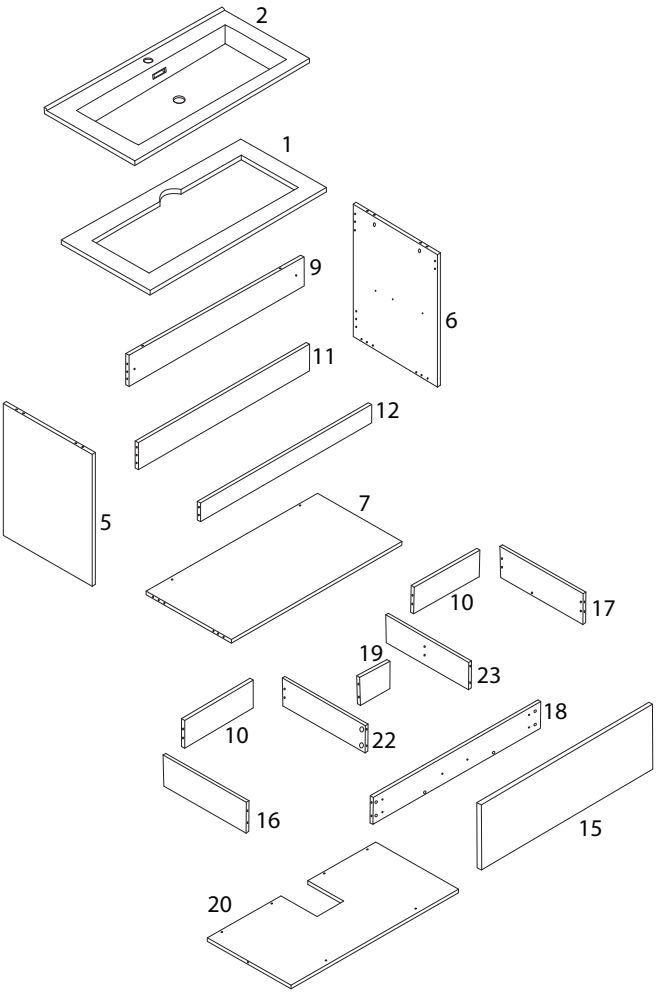
2
1
9
6
11
12
5
7
10
17
19
23
10
22
18
16
15
20

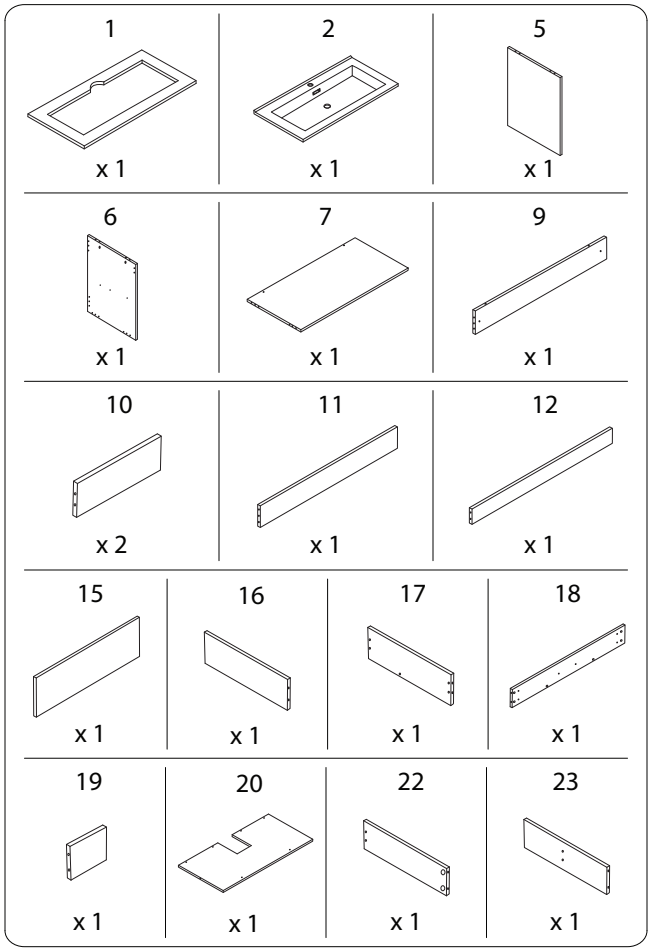
1
x 1
2
x 1
5
x 1
6
x 1
7
x 1
9
x 1
10
x 2
11
x 1
12
x 1
15
x 1
16
x 1
17
x 1
18
x 1
19
x 1
20
x 1
22
x 1
23
x 1

N1 x 54	N2 x 54
N4 x 16	N7L 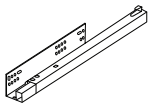 x 1
N7R 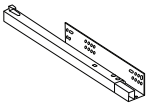 x 1	N10 M4 x 14 x 24
N11 M4 x 25 x 4	N12 M6 x 25 x 2
N13₁ 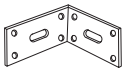 x 2	N13₂ M6 x 70 x 2
N13₃ x 2	

1

1	5	6	7	9	11	N1	N4
x 1	x 1	x 1	x 1	x 1	x 1	x 26	x 16

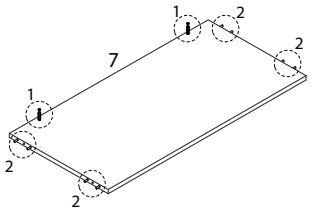

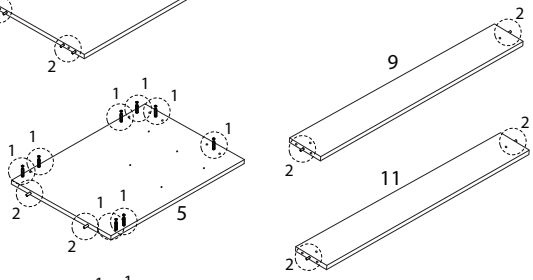

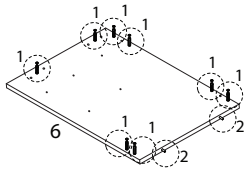

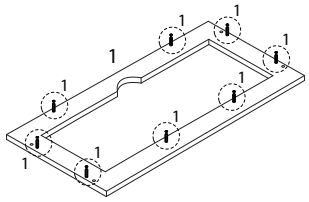

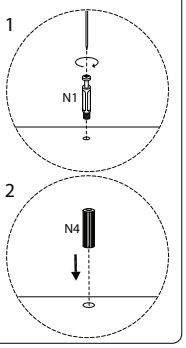

2

16	17	18	20	22	23	N1
x 1	x 1	x 1	x 1	x 1	x 1	x 28

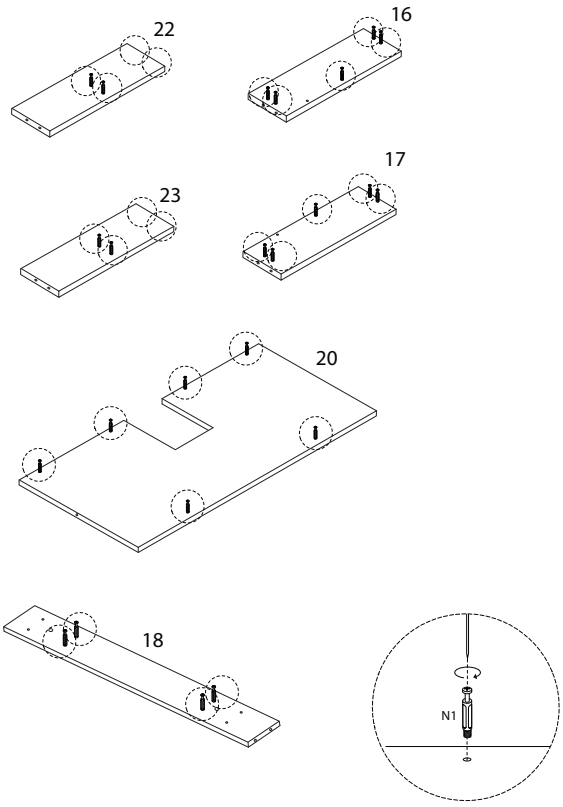

3

N2 x 2

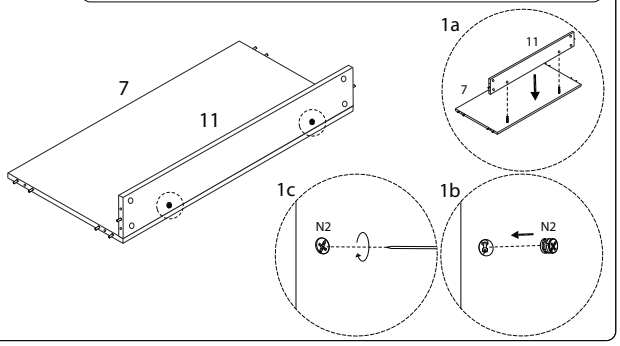

4

N2 x 6

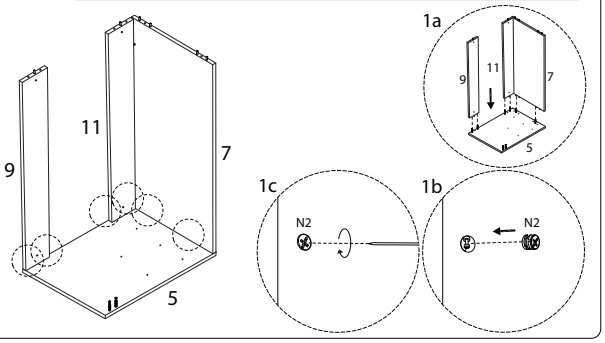

5

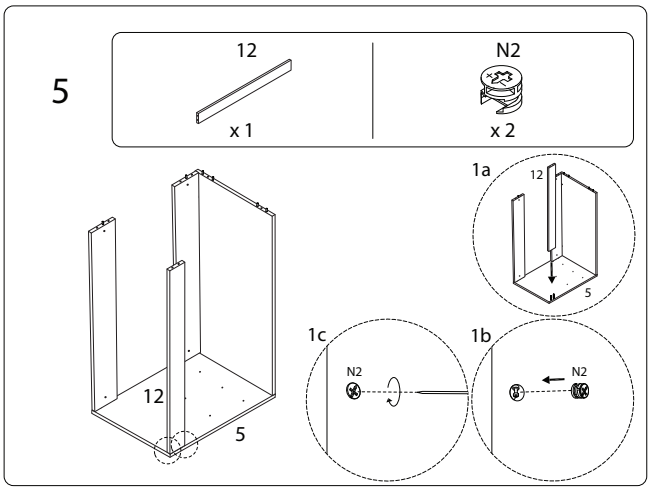

6

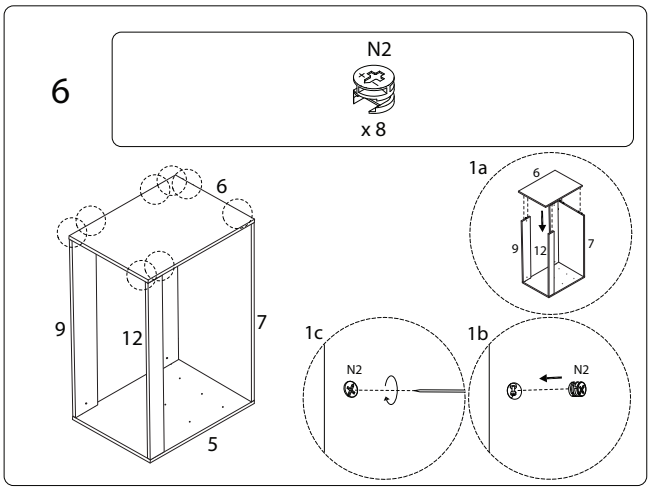

7

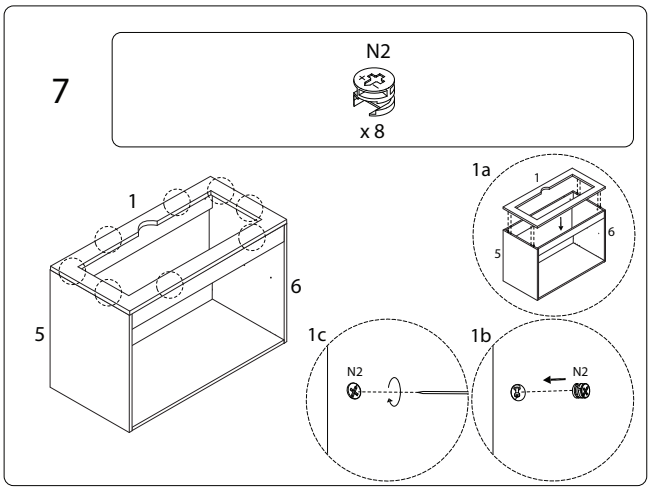

8

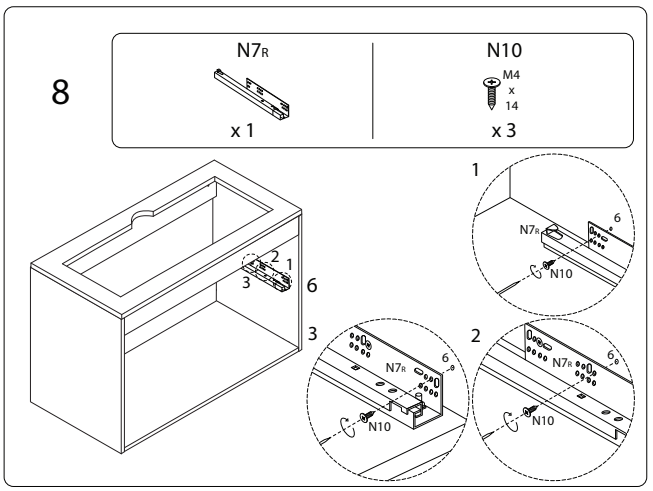

9

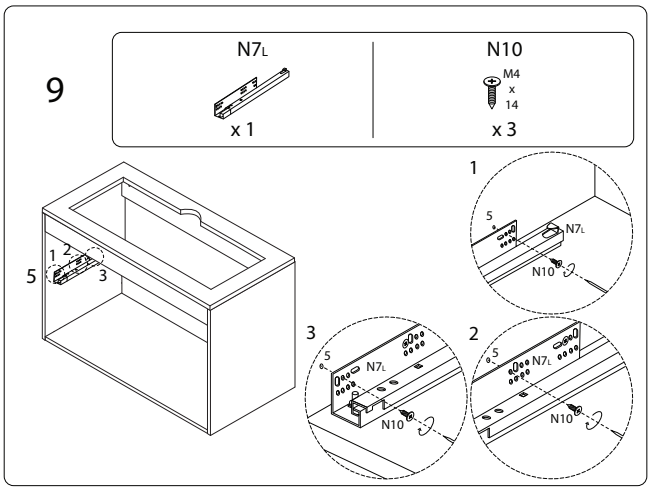

10

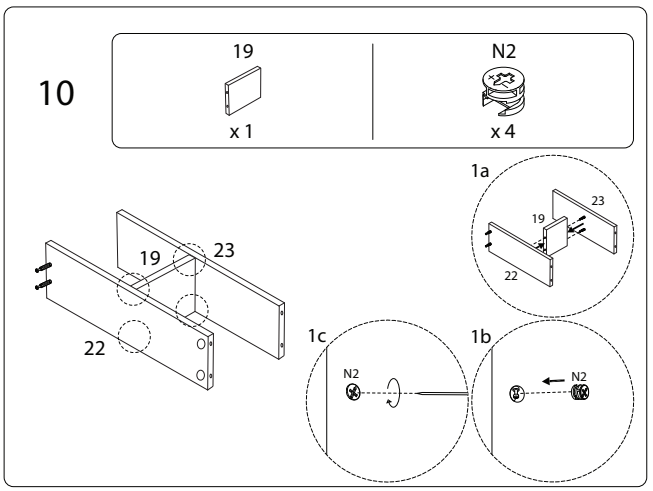

11

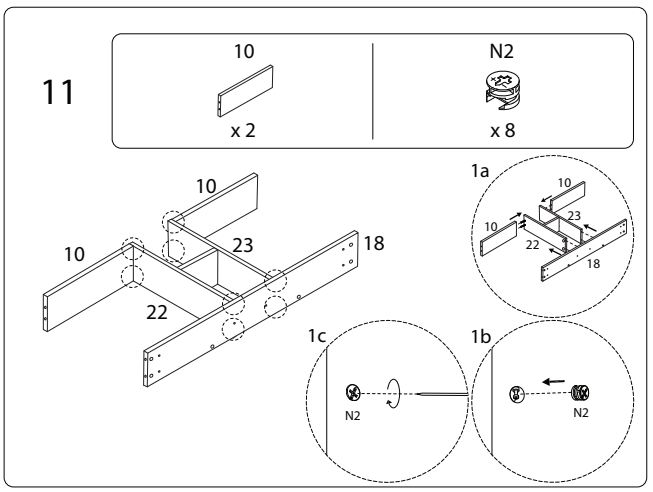

12

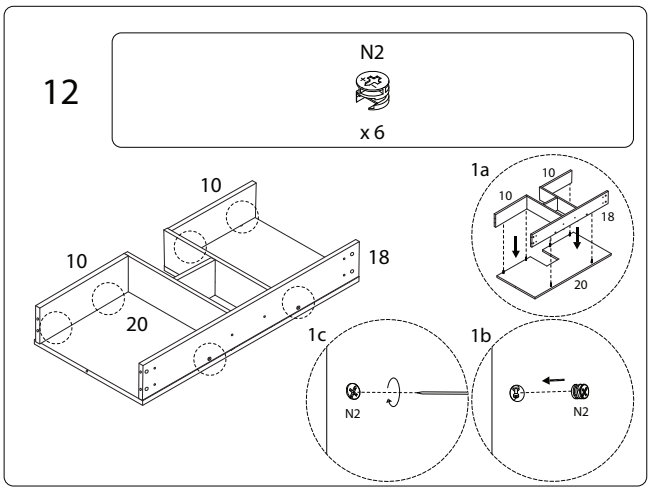

13

N2
x 10

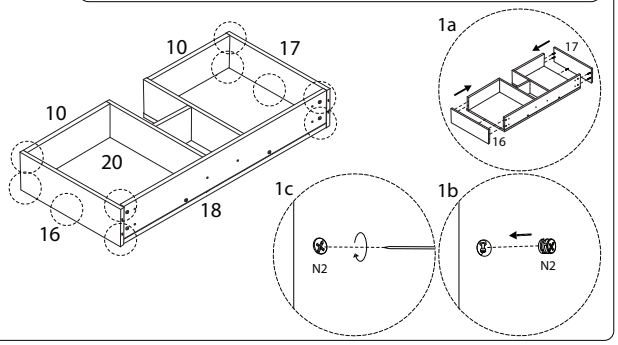

14

15	N12
x 1	M6 x 25 x 2

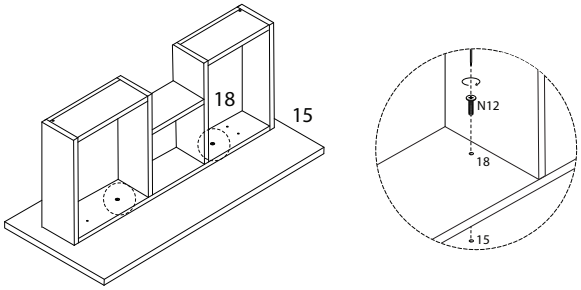

15

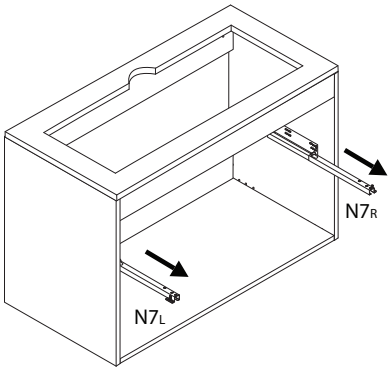

16

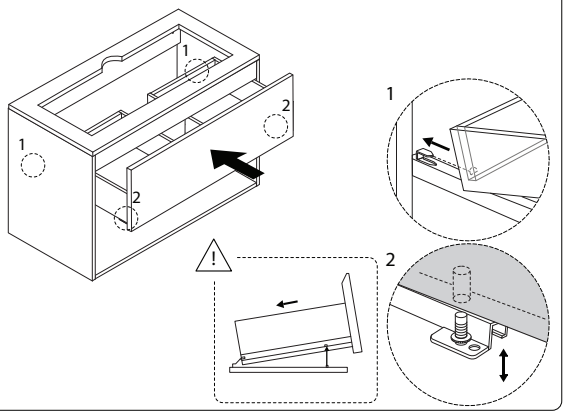

17

N10
M4 x 14
x 2

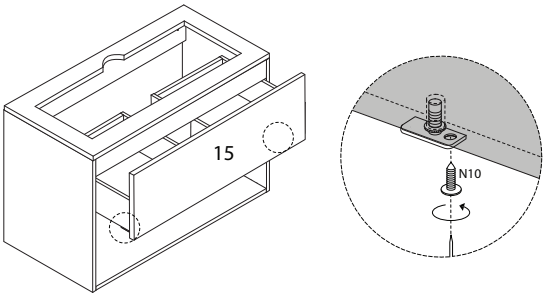

18

N11
M4 x 25
x 4

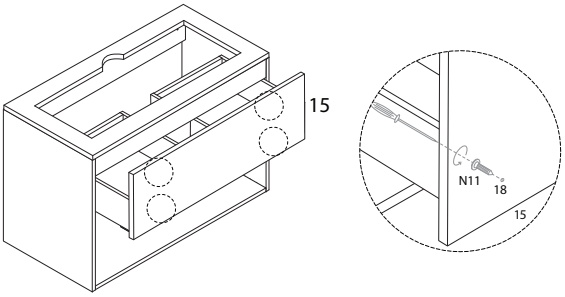

19

N10	N13₁	N13₂	N13₃
M4 x 14 x 16	x 2	M6 x 70 x 2	x 2

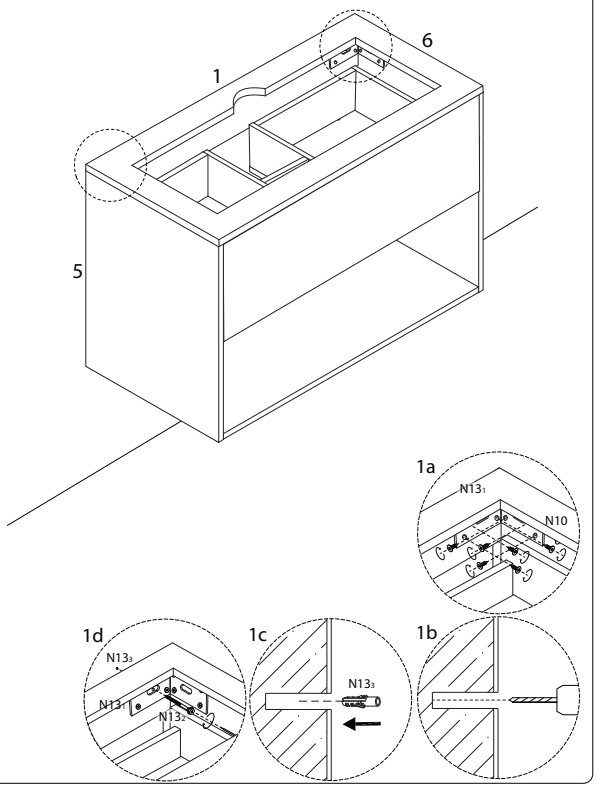

20

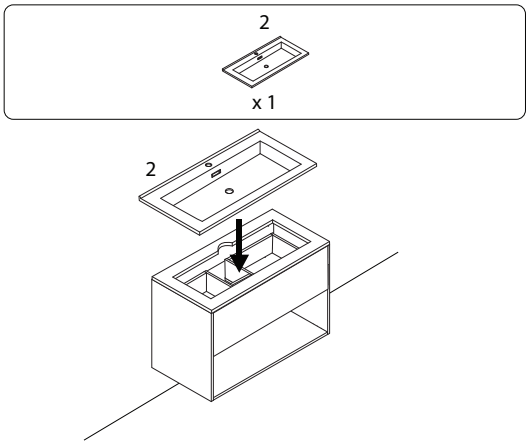

21

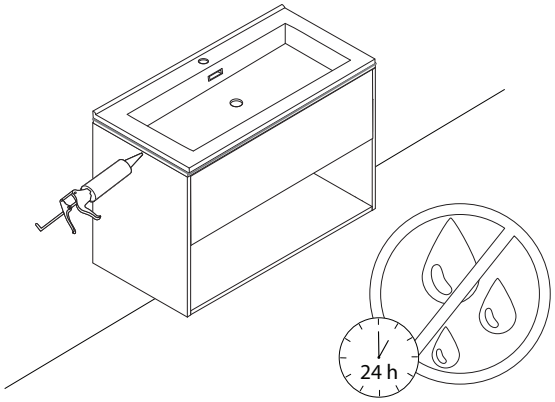
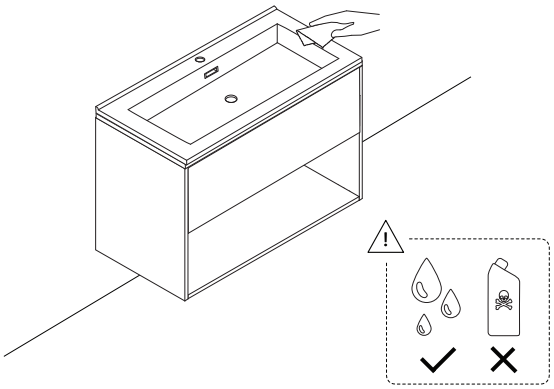
!