LOUSTO

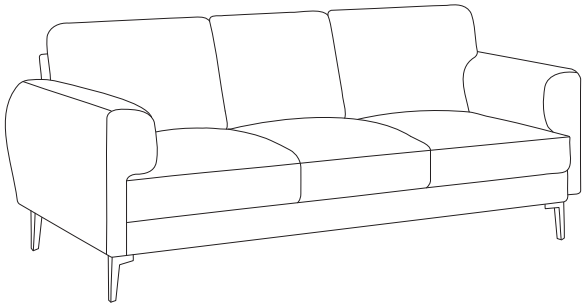

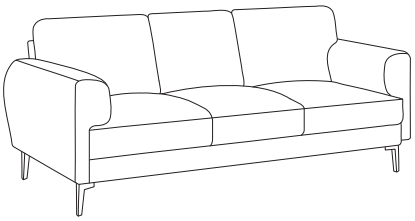

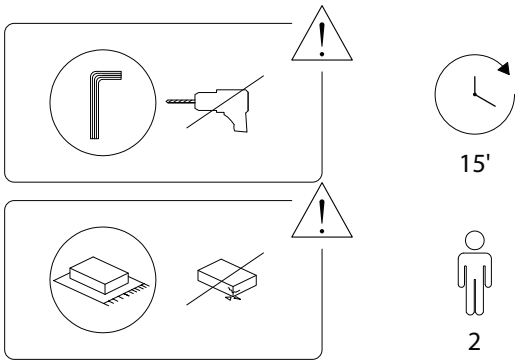

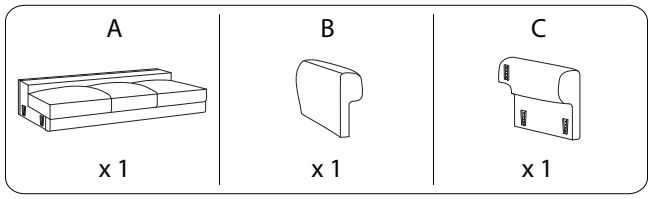

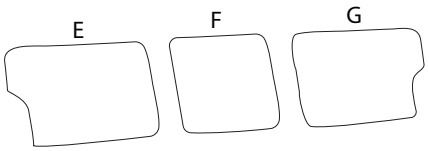

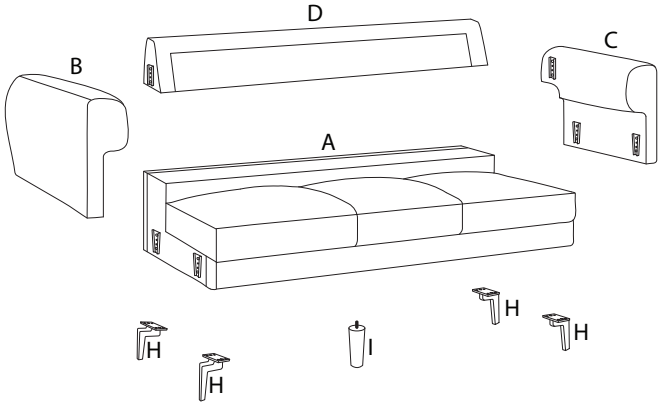

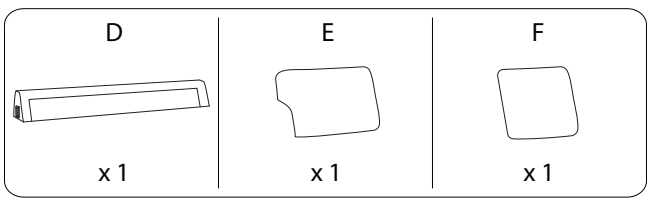

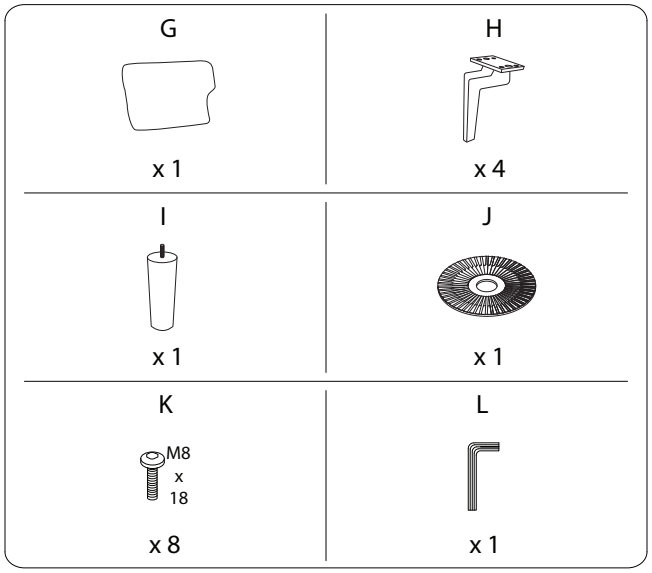

590/LOUSTO/200226/

!

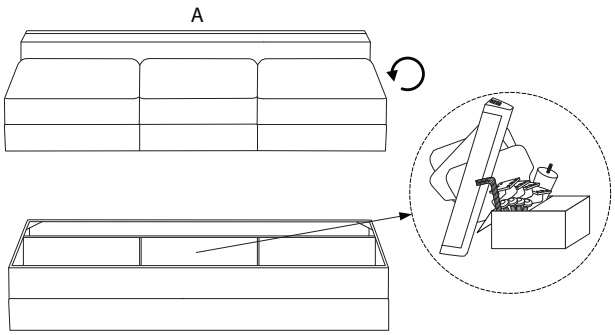
A

2

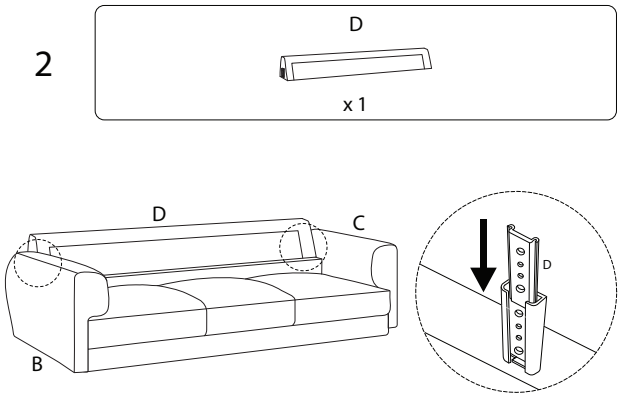
D
x 1
D
C
B
D

1

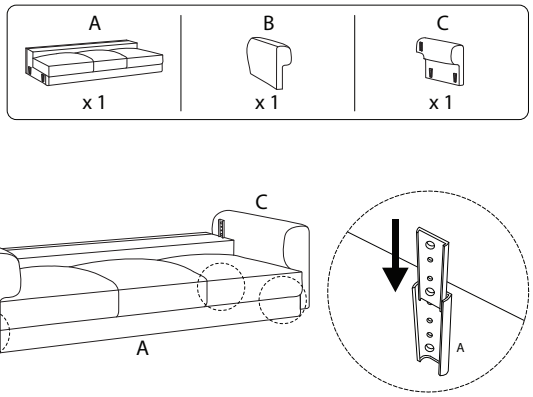
A
x 1
B
x 1
C
x 1
B
C
A
A

3

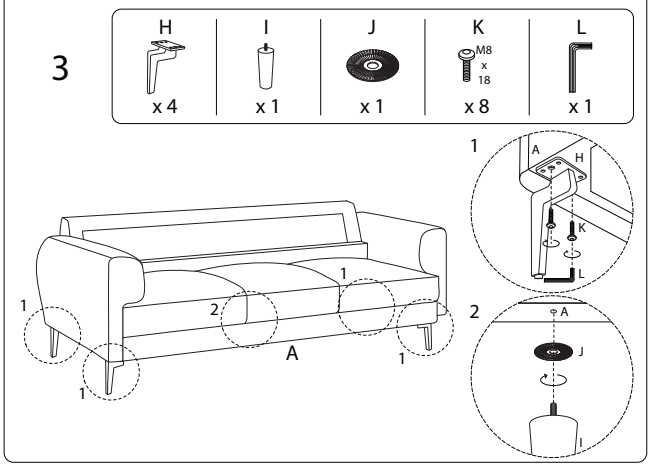
H
x 4
I
x 1
J
x 1
K
M8
x
18
x 8
L
x 1
1
A
H
K
L
2
A
J
I
1
2
A
1
1
1

4

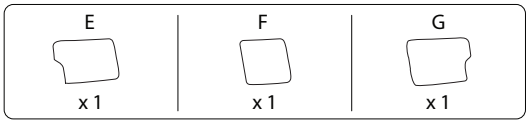
E
x 1
F
x 1
G
x 1

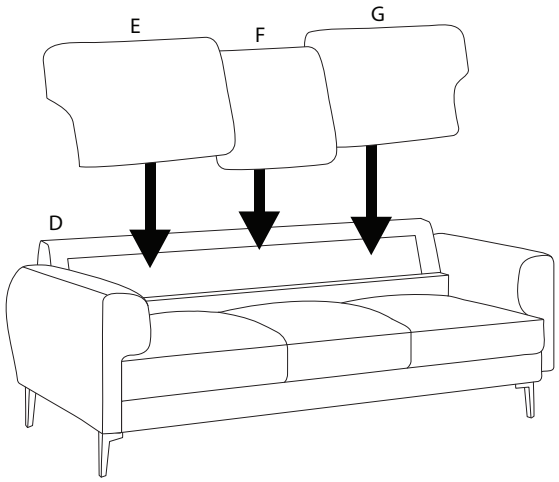
E
F
G
D