CEJAR

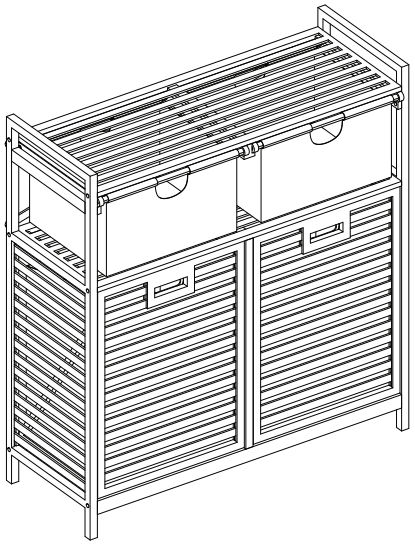

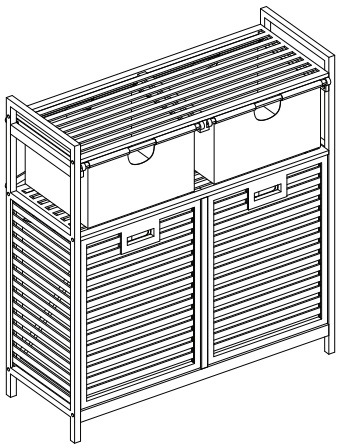

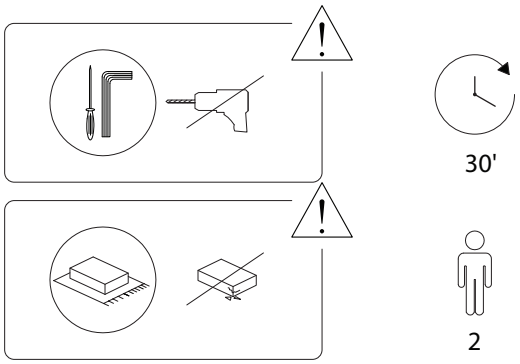

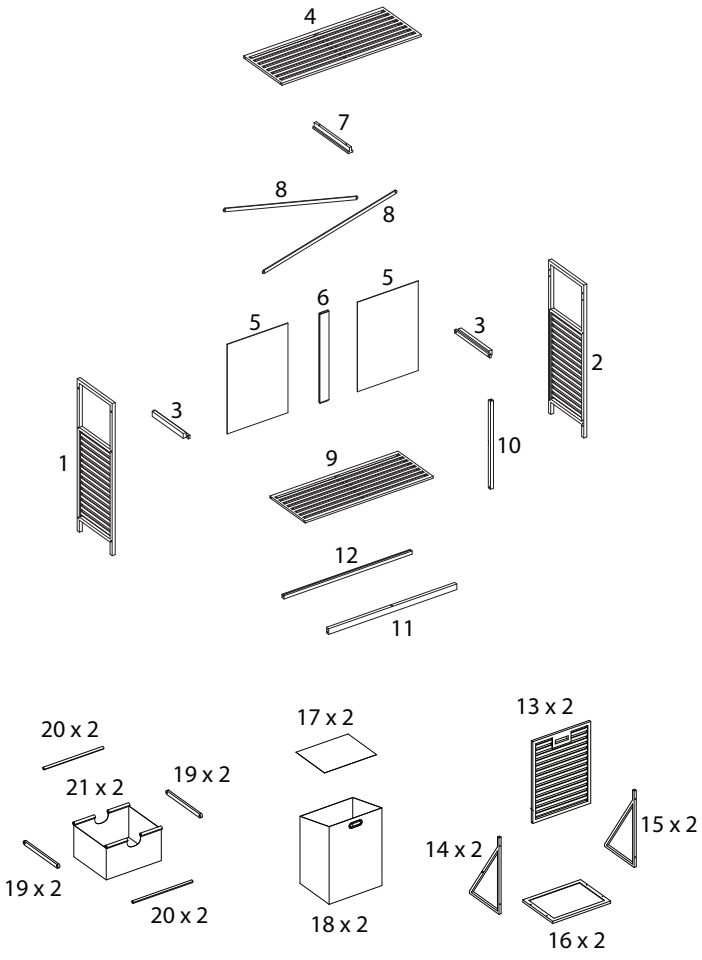

1 x 1	2 x 1	3 x 2	4 x 1
5 x 2	6 x 1	7 x 1	8 x 2
9 x 1	10 x 1	11 x 1	12 x 1
13 x 2	14 x 2	15 x 2	16 x 6
17 x 2	18 x 2	19 x 2	20 x 2	21 x 2

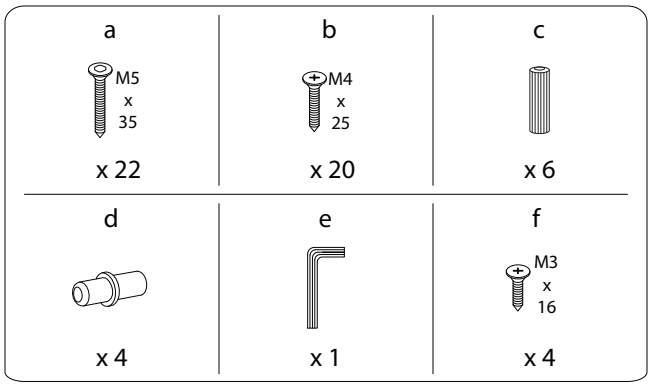
a
M5 x 35
x 22
b
M4 x 25
x 20
c
x 6
d
x 4
e
x 1
f
M3 x 16
x 4

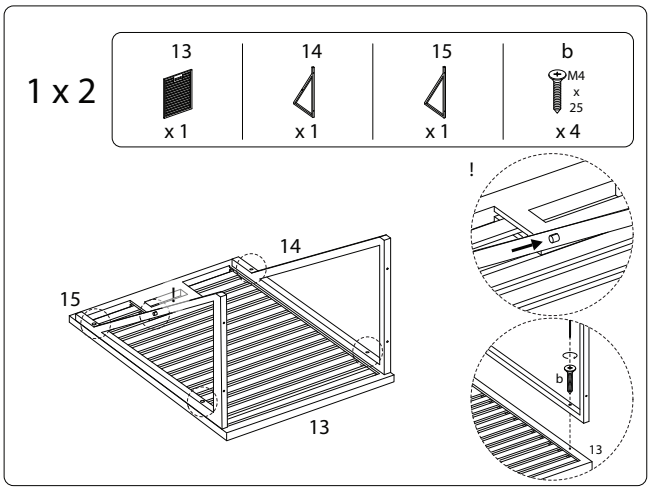
1 x 2
13
x 1
14
x 1
15
x 1
b
M4 x 25
x 4
!
14
15
13
b
13

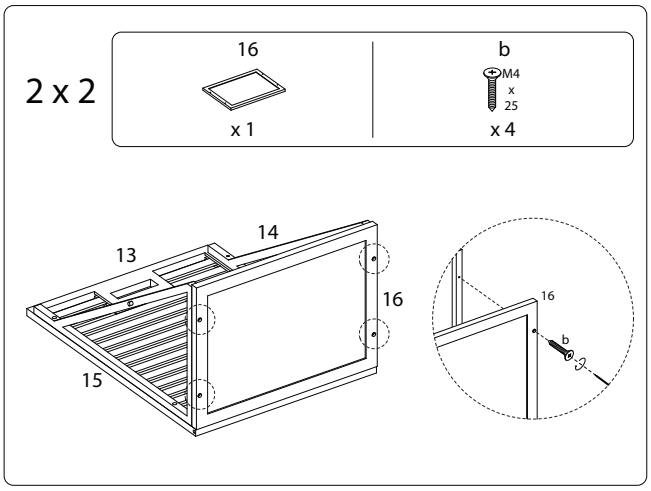
2 x 2
16
x 1
b
M4 x 25
x 4
14
13
16
15
16
b

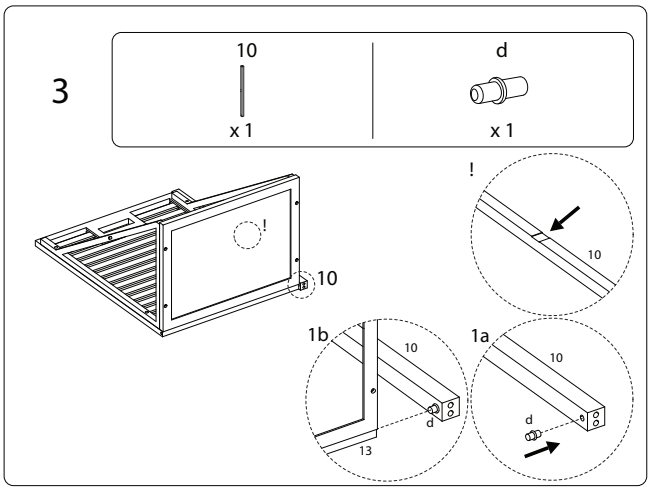
3
10
x 1
d
x 1
!
10
1b
10
d
13
1a
10
d

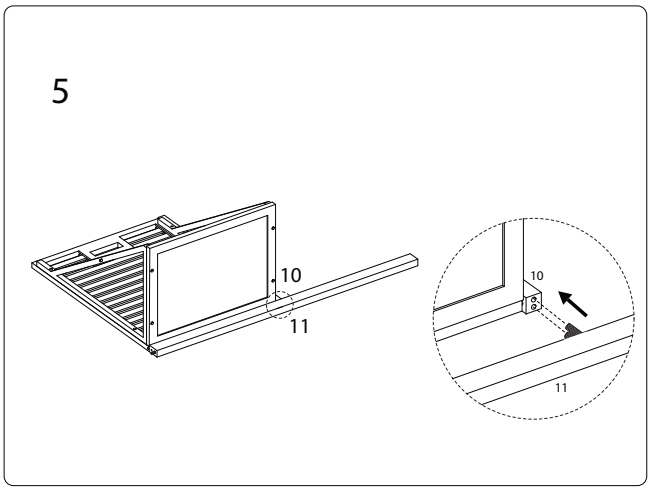
5
10
11
10
11

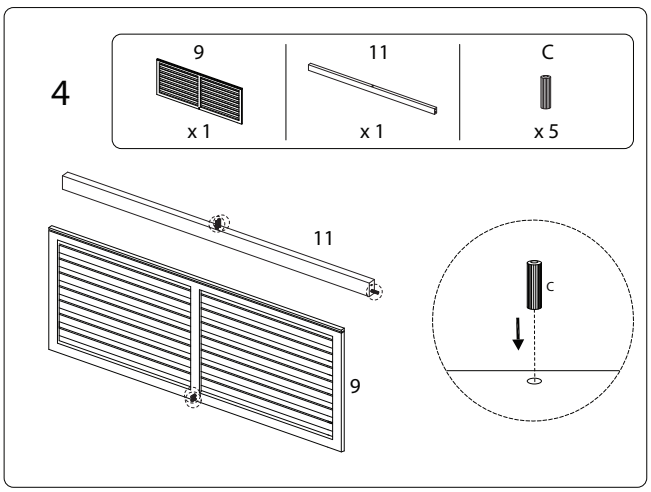
4
9
x 1
11
x 1
C
x 5
11
9
C

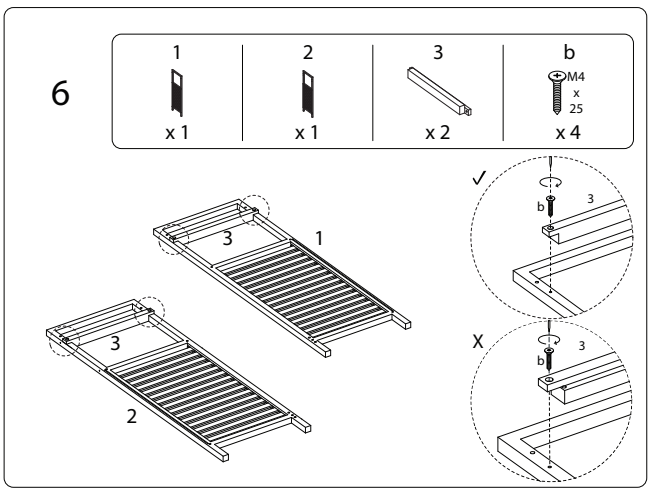
6
1
x 1
2
x 1
3
x 2
b
M4 x 25
x 4
✓
3
1
3
2
X
3

7

a M5 x 35 x 1 | d x 1 | e x 1

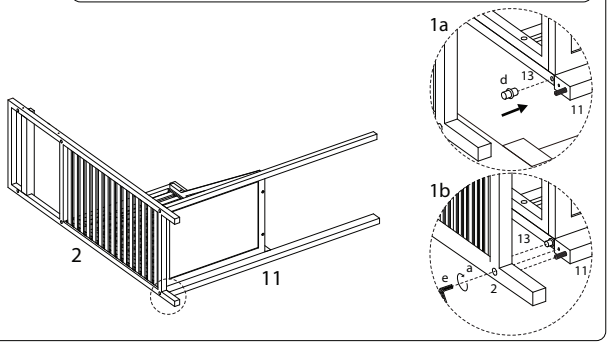

8

a M5 x 35 x 2 | e x 1

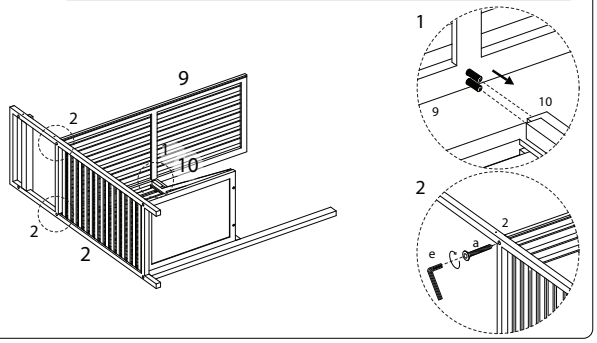

9

4 x 1 | 7 x 1 | a M5 x 35 x 2 | e x 1

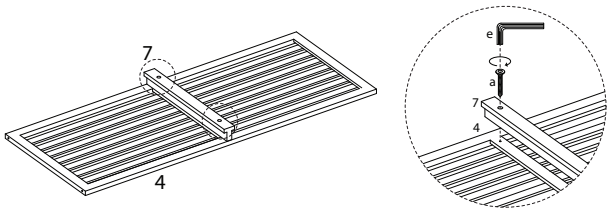

10

a M5 x 35 x 2 | e x 1

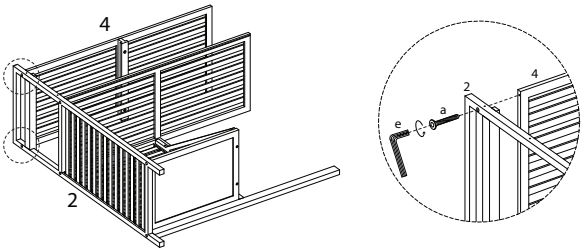

11

d x 1

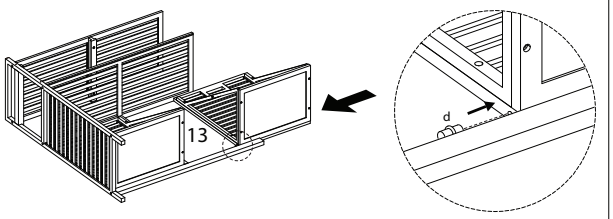

12

12 x 1 | a M5 x 35 x 1 | e x 1

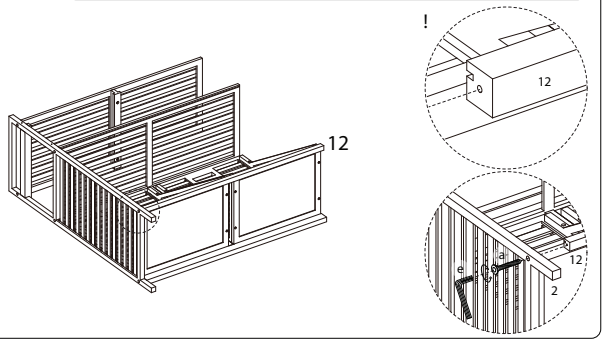

13

5 x 1 | 6 x 1

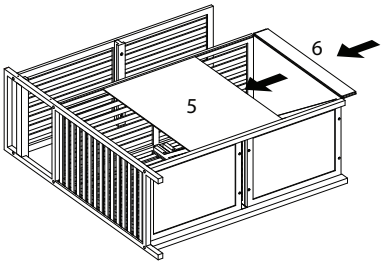

14

5 x 1

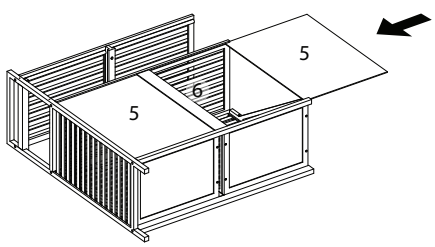

15

c	d
x 1	x 1

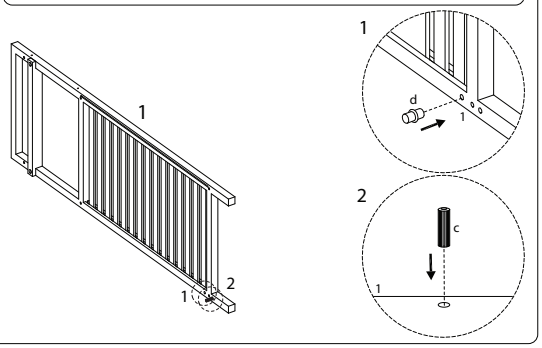

16

a	e
M5 x 35 x 6	x 1

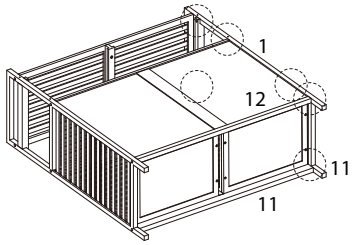

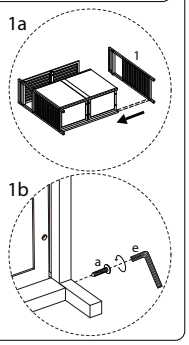

2213/CEJAR/041126

17

8	f
x 2	M3 x 16 x 4

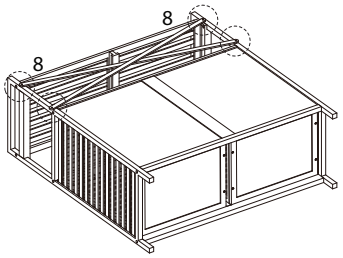

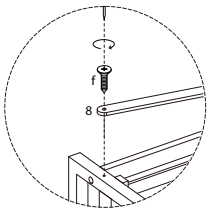

18 x 2

19	20	a	e
x 1	x 1	M5 x 35 x 1	x 1

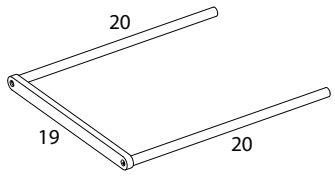

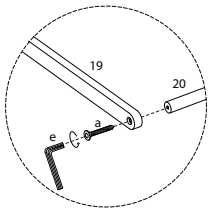

2213/CEJAR/041126

19 x 2

19	21	a	e
x 1	x 1	M5 x 35 x 2	x 1

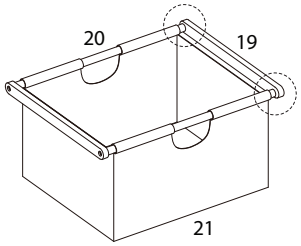

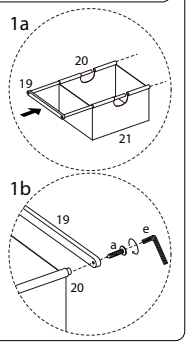

21

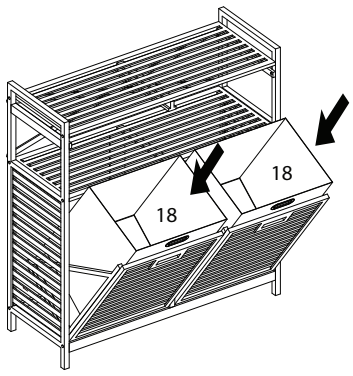

20 x 2

17	18
x 1	x 1

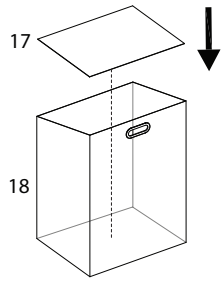

2213/CEJAR/041126

22

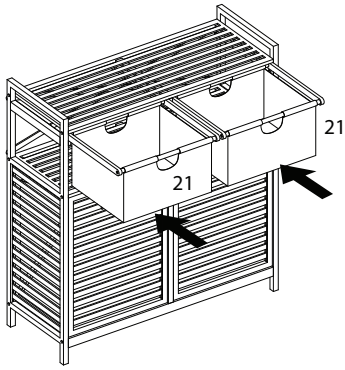

2213/CEJAR/041126