ARICA

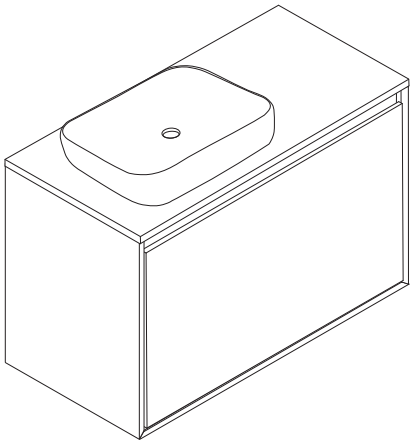

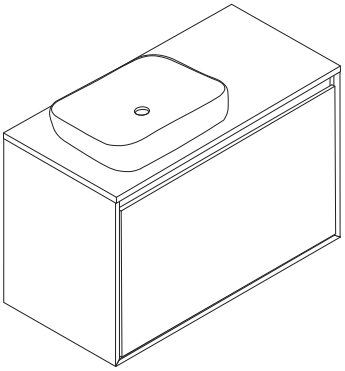

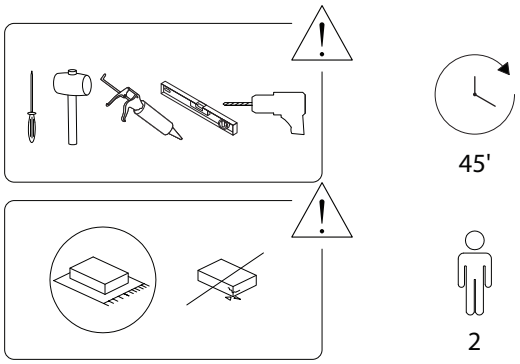
45'
2

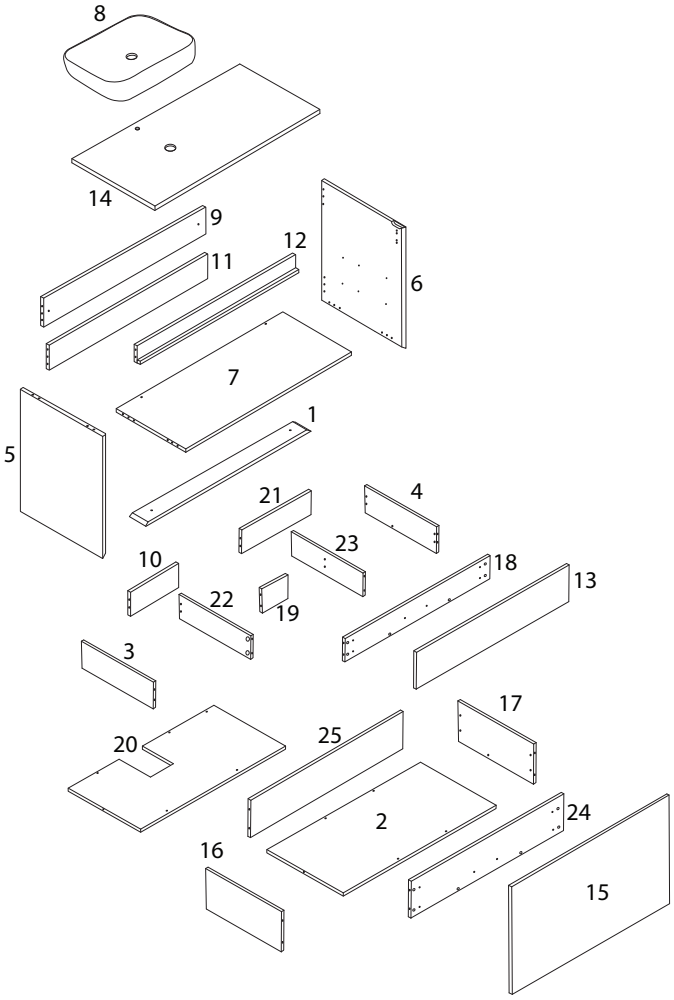
8
14
9
11
12
6
7
1
5
21
4
23
10
18
13
22
19
3
17
20
25
2
24
16
15

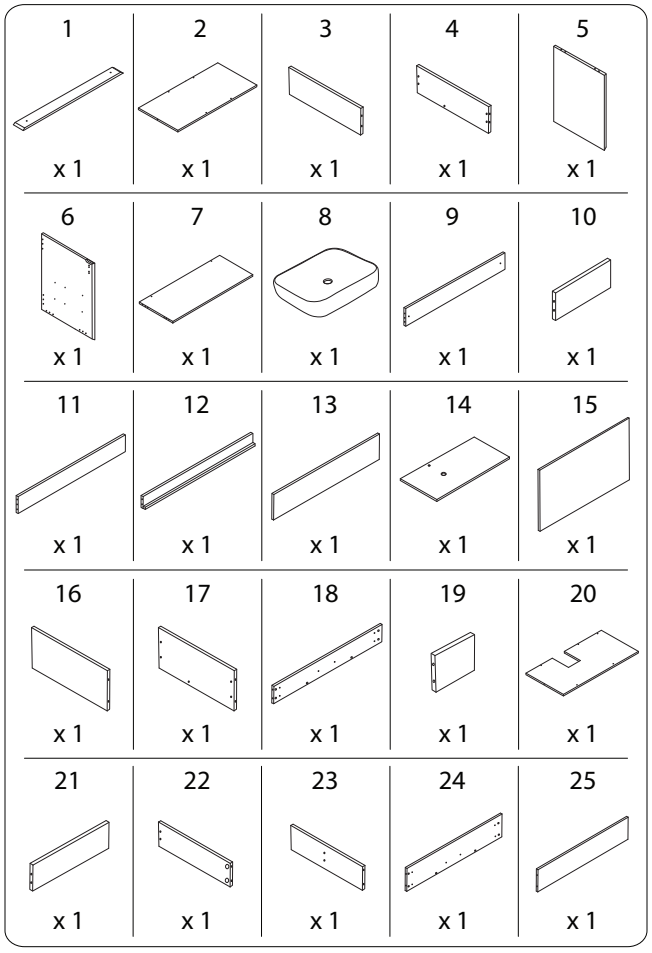
1 x 1
2 x 1
3 x 1
4 x 1
5 x 1
6 x 1
7 x 1
8 x 1
9 x 1
10 x 1
11 x 1
12 x 1
13 x 1
14 x 1
15 x 1
16 x 1
17 x 1
18 x 1
19 x 1
20 x 1
21 x 1
22 x 1
23 x 1
24 x 1
25 x 1

N1 x 59	N2 x 59
N4 x 12	N7L 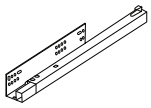 x 2
N7R 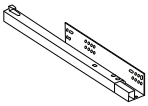 x 2	N10 M4 x 14 x 32
N11 M4 x 25 x 11	N12 M6 x 25 x 4
N13₁ 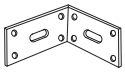 x 2	N13₂ M6 x 70 x 2
N13₃ x 2	

1

5	6	7	9	11	N1	N4
x 1	x 1	x 1	x 1	x 1	x 18	x 12

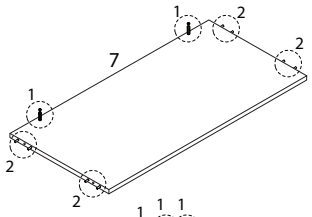

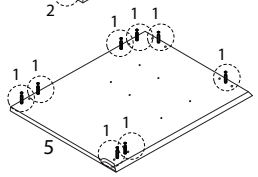

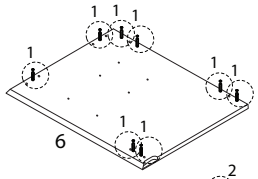

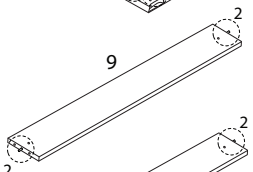

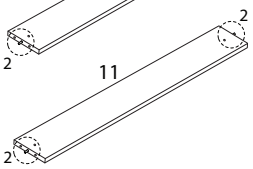

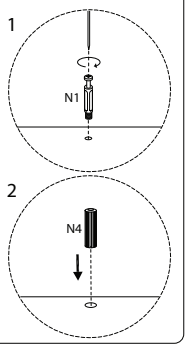

2

2	3	4	16	17
x 1	x 1	x 1	x 1	x 1
18	20	22	23	N1
x 1	x 1	x 1	x 1	x 41

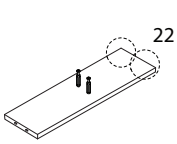

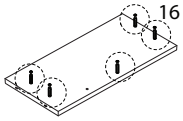

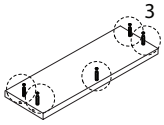

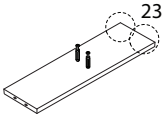

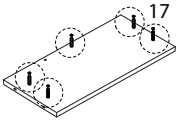

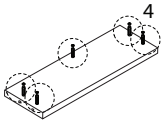

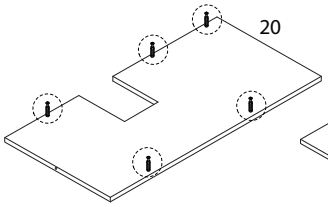

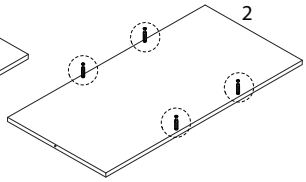

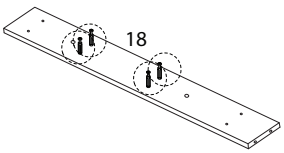

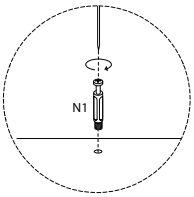

3

N2 x 2

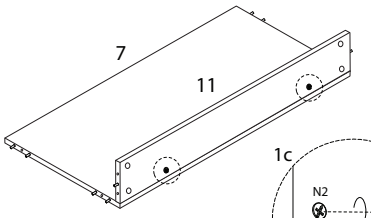

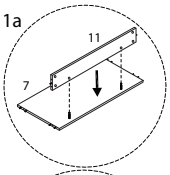

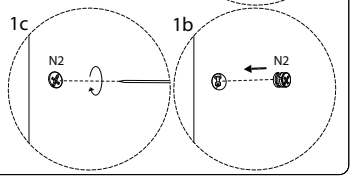

4

N2 x 6

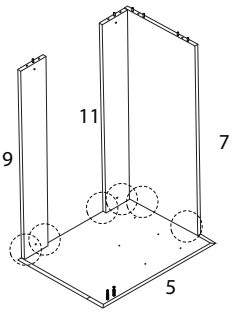

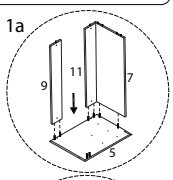

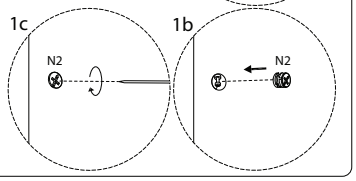

5

12	N2
x 1	x 2

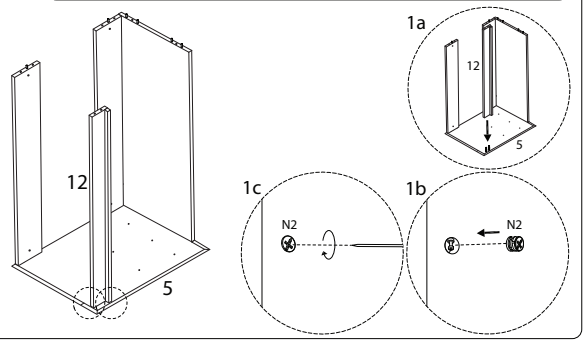

7

1	N11
x 1	M4 x 25 x 3

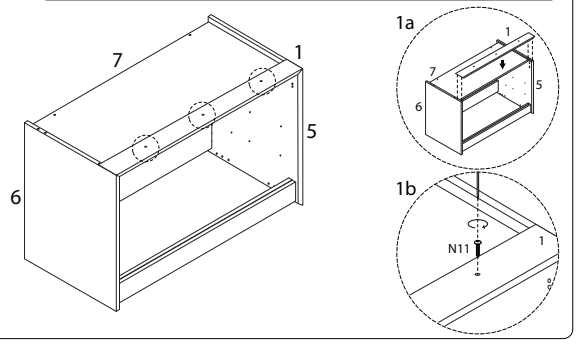

6

N2
x 8

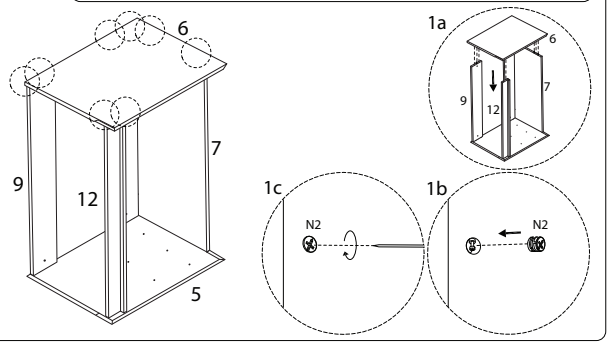

8

N7R	N10
x 2	M4 x 14 x 6

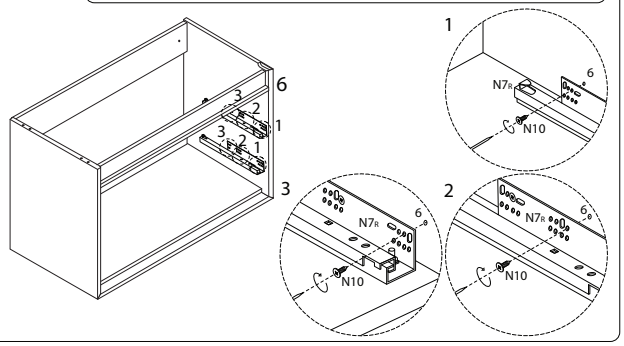

9

N7L	N10
x 2	M4 x 14 x 6

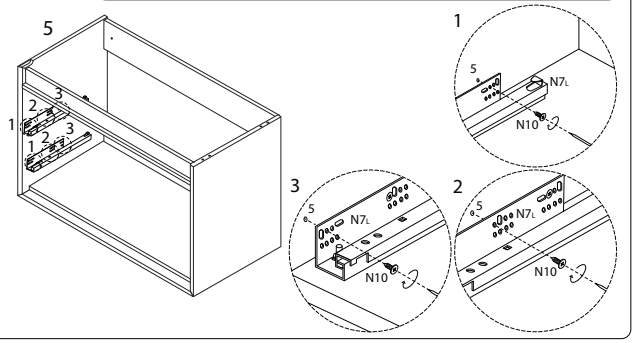

11

10	21	N2
x 1	x 1	x 8

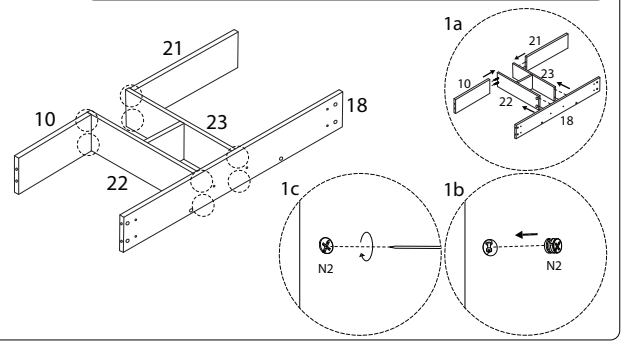

10

19	N2
x 1	x 4

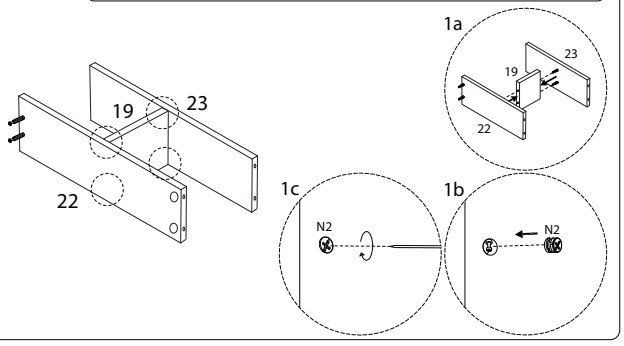

12

N2
x 5

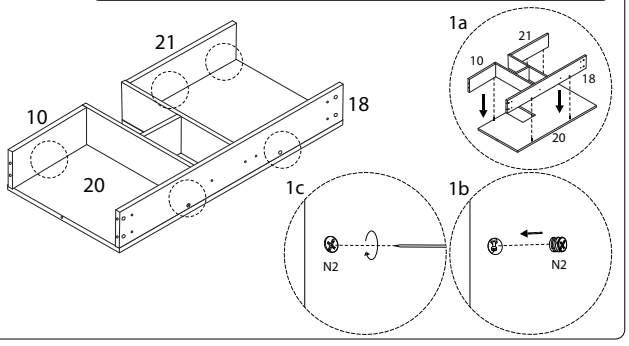

13

N2 x 10

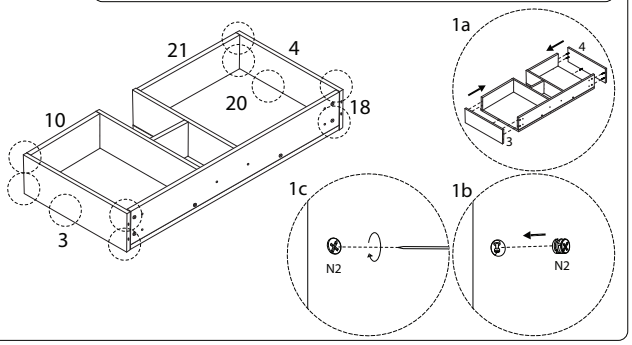

14

24	25	N2
x 1	x 1	x 4

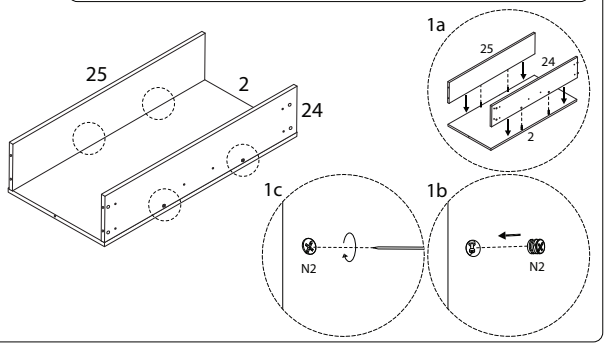

15

N2 x 10

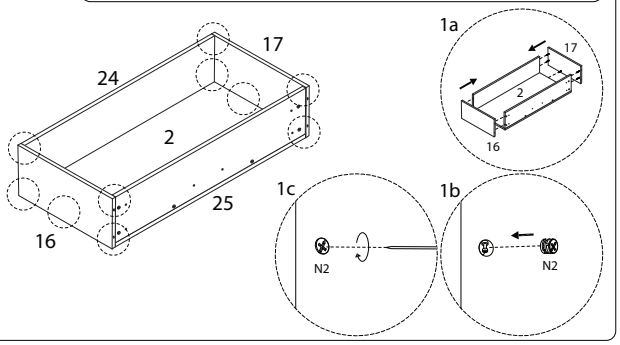

16

13	N12
x 1	M6 x 25 x 2

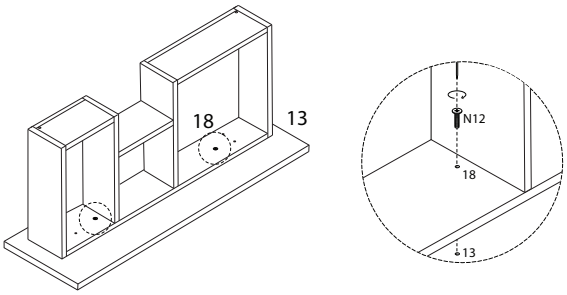

17

15	N12
x 1	M6 x 25 x 2

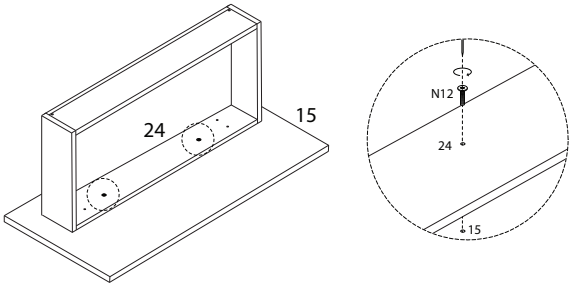

18

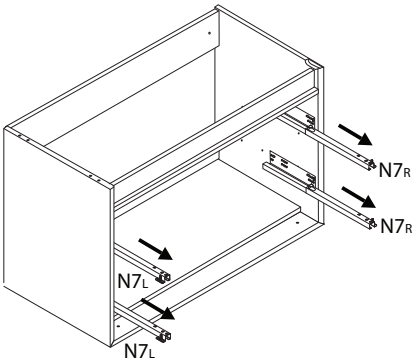

19

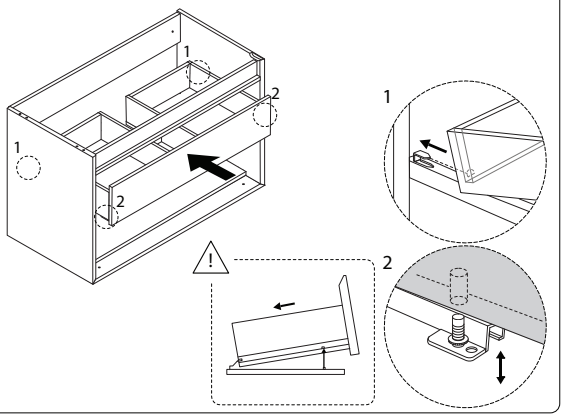

20

N10 M4 x 14 x 2

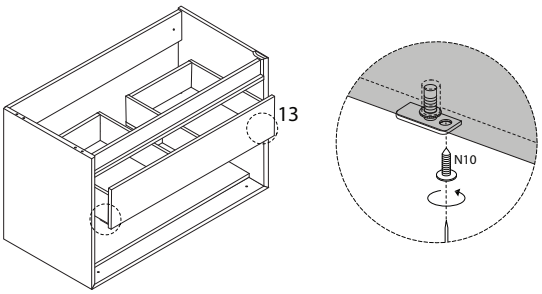

21

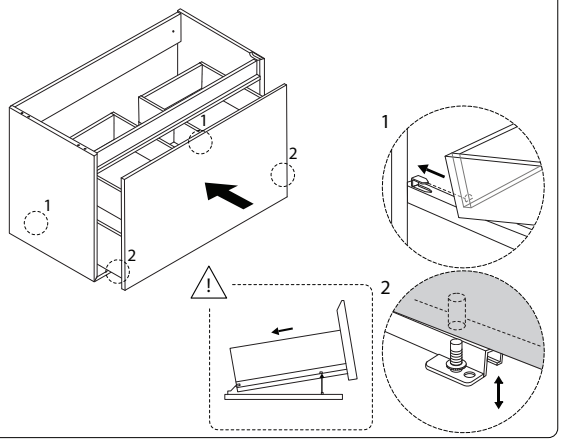

22

N10
M4 x 14
x 2

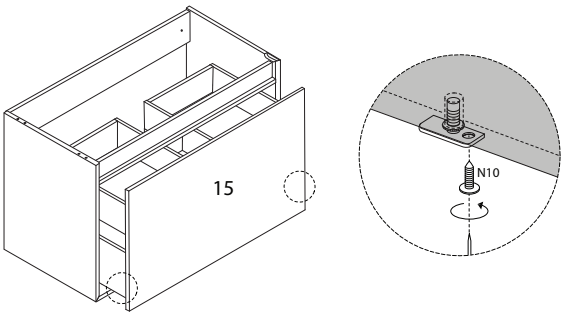

23

N11
M4 x 25
x 4

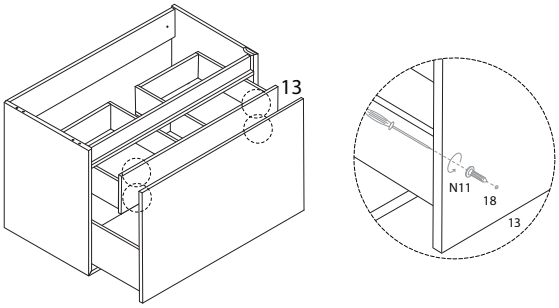

24

N11
M4 x 25
x 4

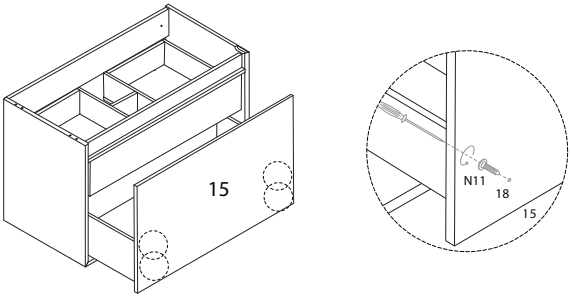

25

N10	$N13_1$	$N13_2$	$N13_3$
M4 x 14		M6 x 70	
x 16	x 2	x 2	x 2

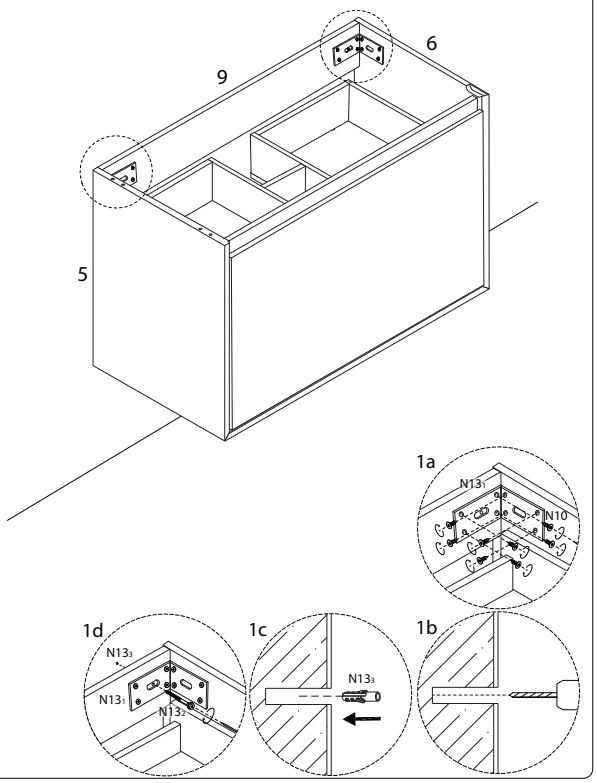

26

8	14
x 1	x 1

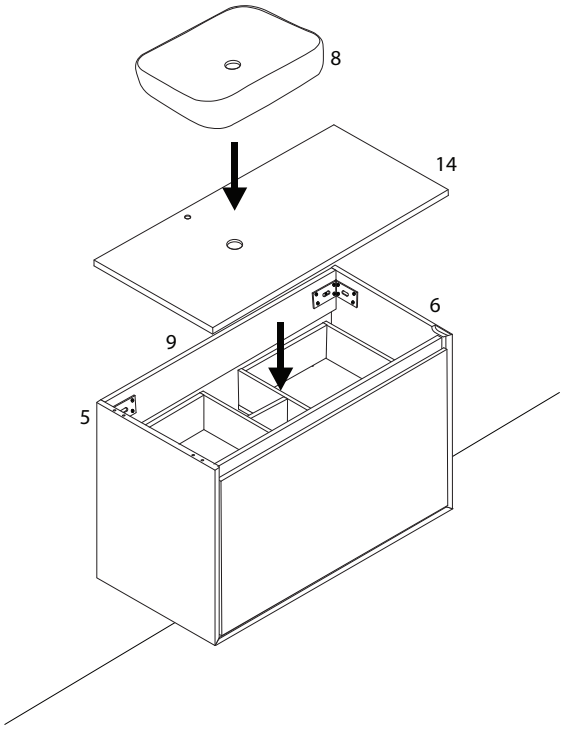

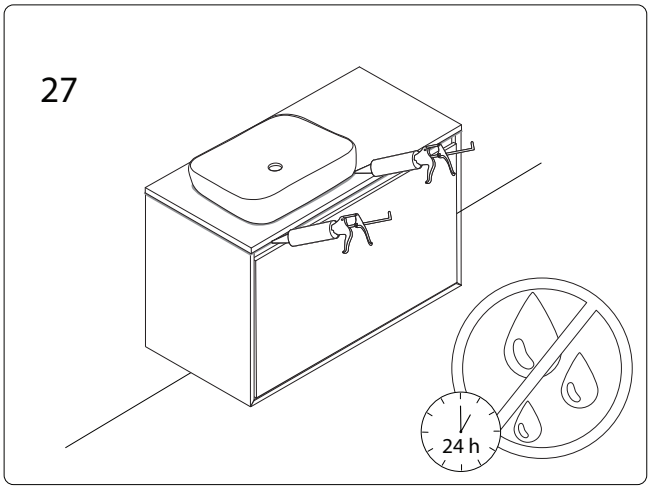

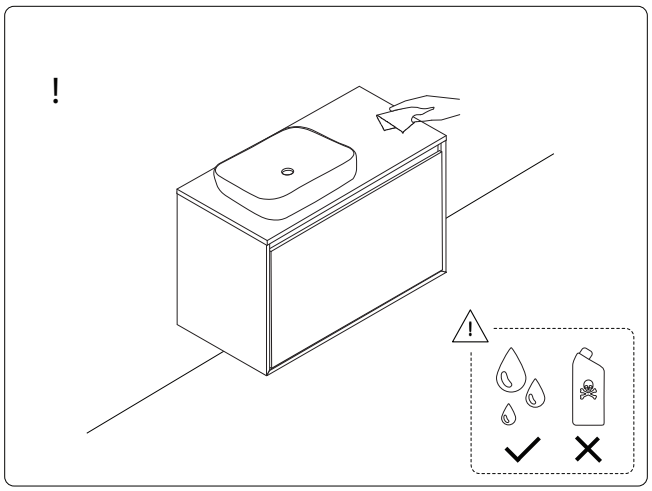

2353/ARICA /020925/