COLLIE

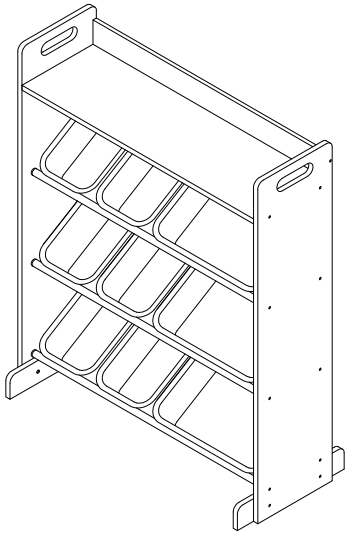

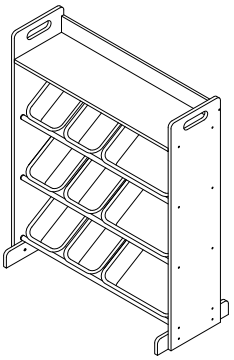

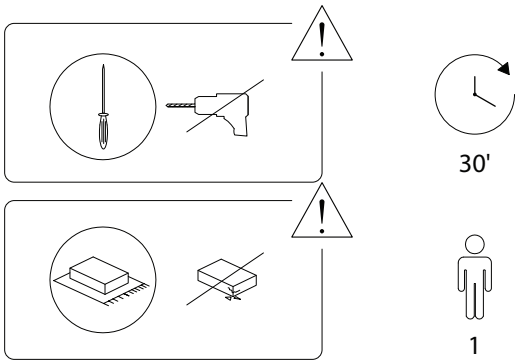
30'
1

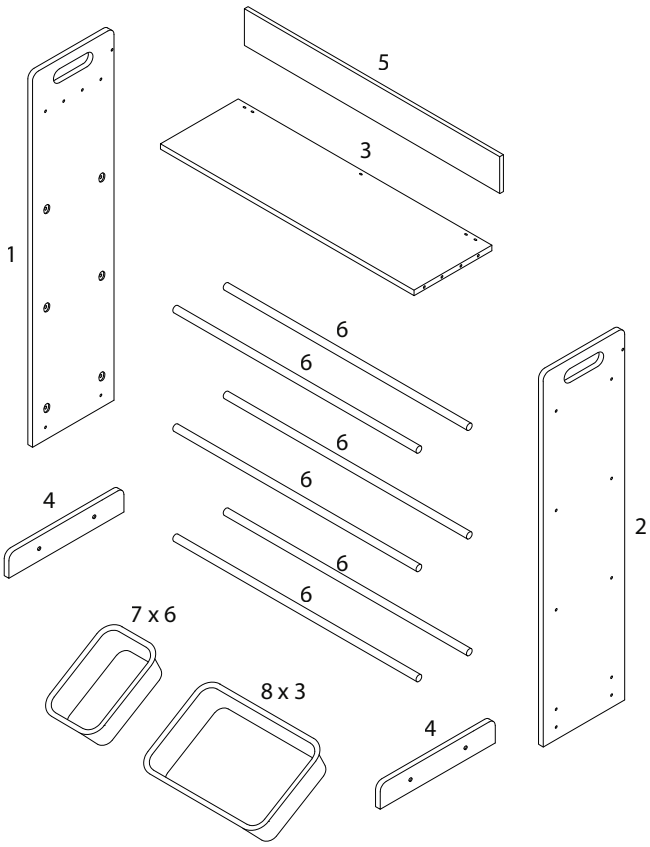
1
5
3
6
6
6
6
6
6
4
7 x 6
8 x 3
4
2

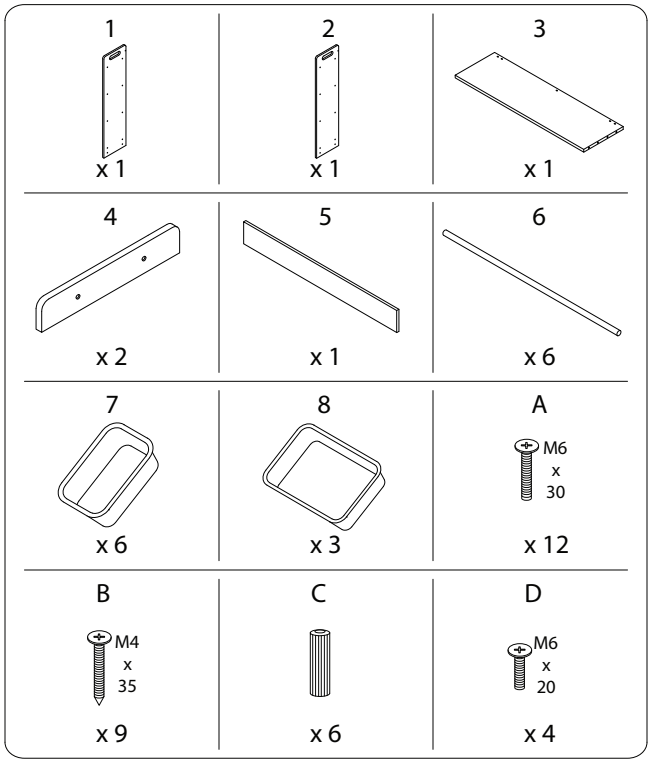
1
x 1
2
x 1
3
x 1
4
x 2
5
x 1
6
x 6
7
x 6
8
x 3
A
M6
x
30
x 12
B
M4
x
35
x 9
C
x 6
D
M6
x
20
x 4

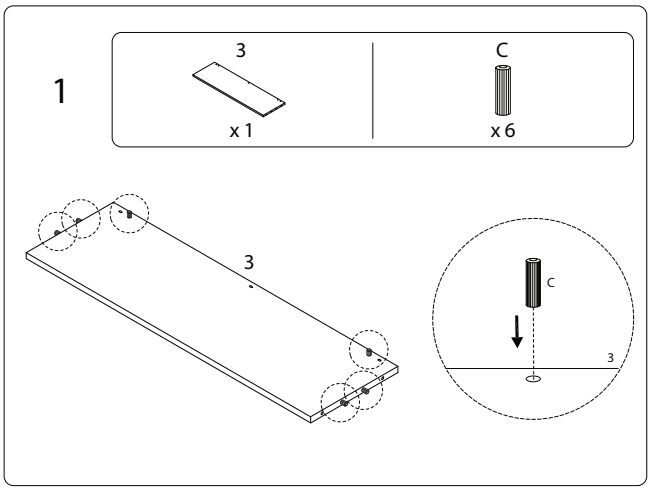

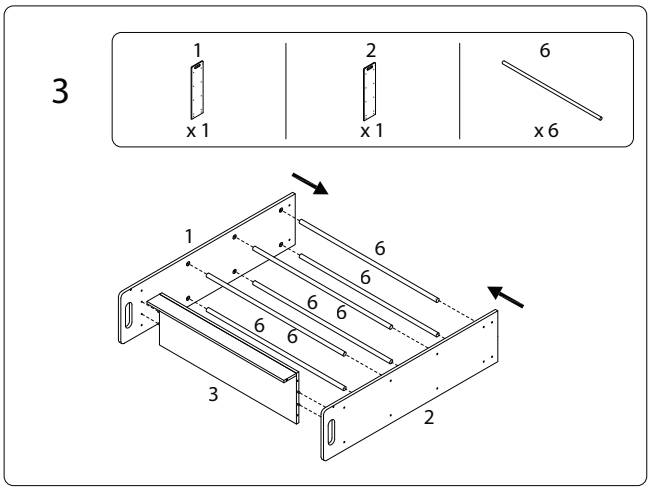

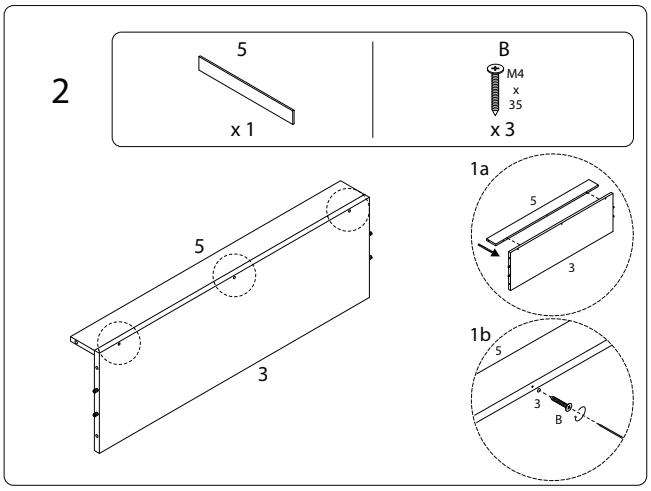

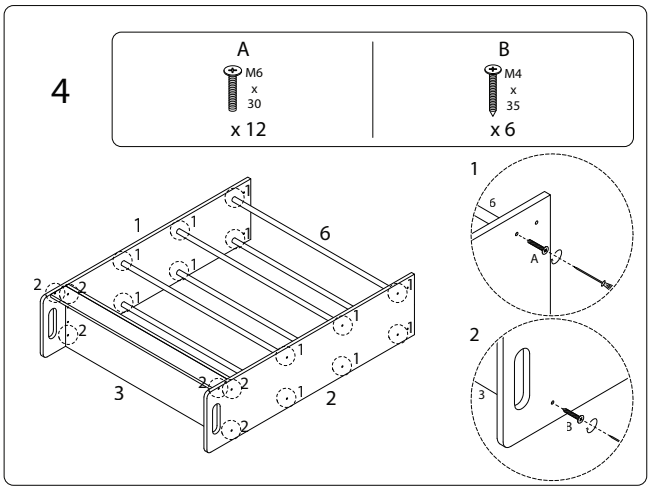

4/6

2387/COLLIE/140325/

5/6

2387/COLLIE/140325/

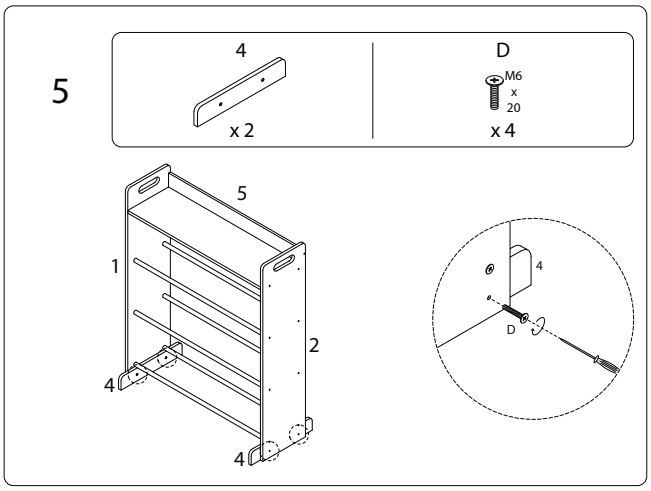

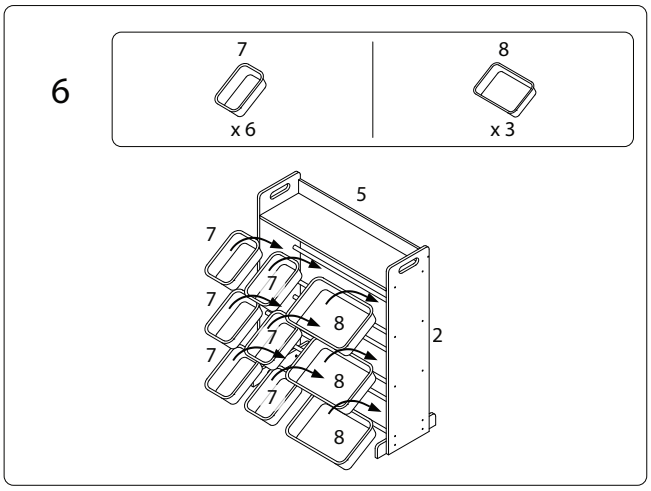

6/6

2387/COLLIE/140325/