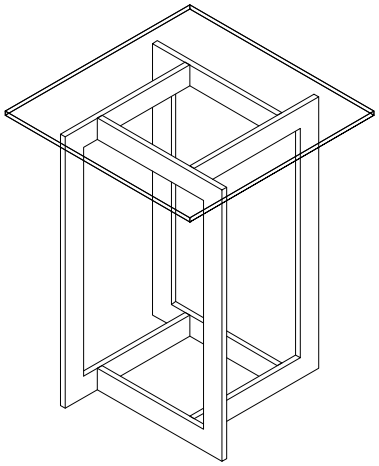

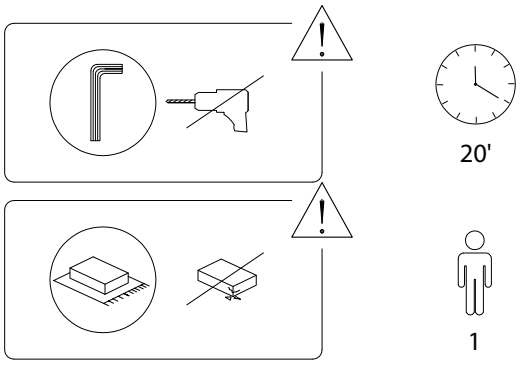

1/4

1087/CRYSTAL/291119/

A	B	C	D	E
x 4	M6 x 20 x 16	x 1	x 4	x 1

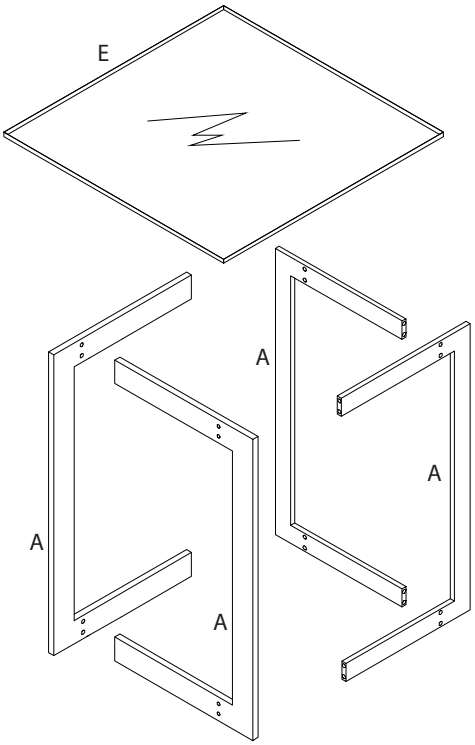

2/4

1087/CRYSTAL/291119/

1

A	B	C
x 2	M6 x 20 x 4	x 1

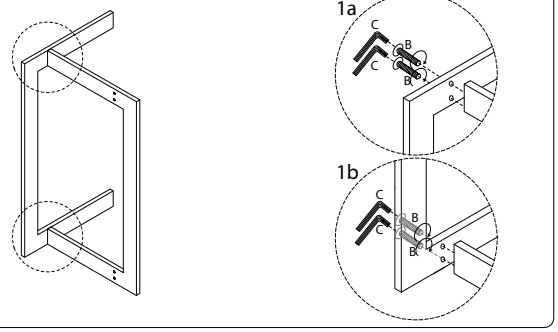

3

B	C
M6 x 20 x 8	x 1

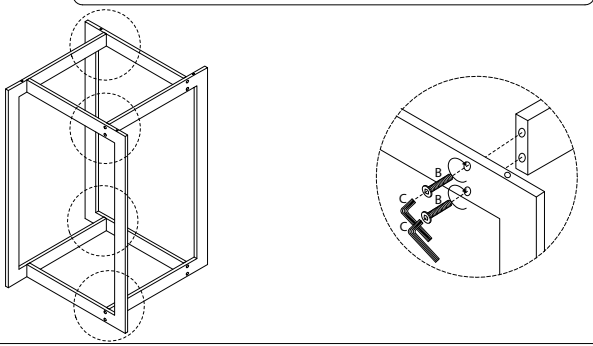

2

A	B	C
x 2	M6 x 20 x 4	x 1

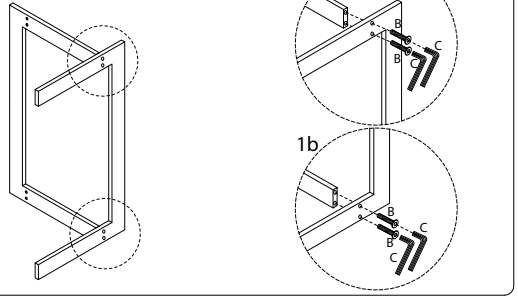

3/4

1087/CRYSTAL/291119/

4

D	E
x 4	x 1

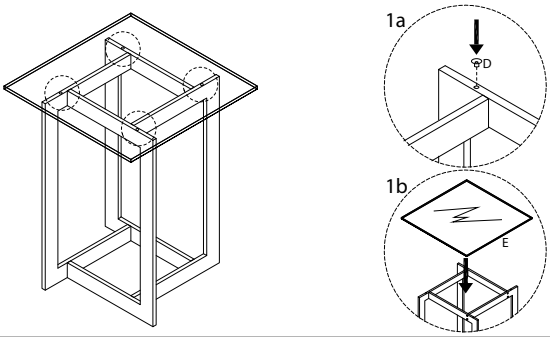

4/4

1087/CRYSTAL/291119/