EVELYN





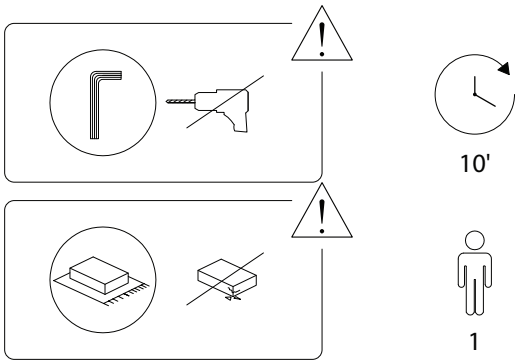

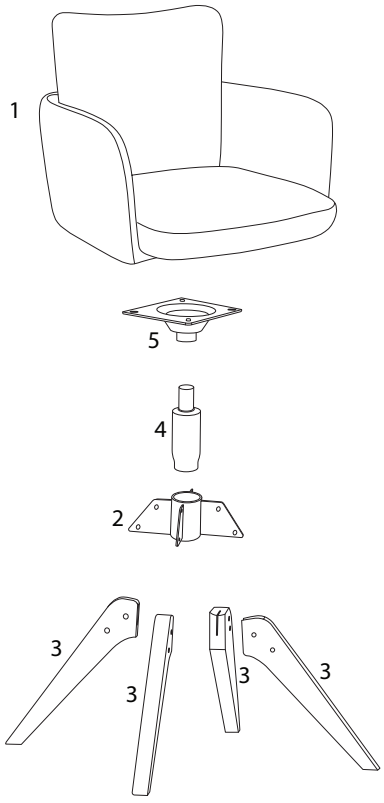

1  x 1	2 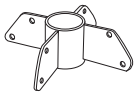 x 1
3  x 4	4  x 1
5  x 1	6  x 4

A  x 4	B  x 8	C  x 8
D  x 12	E  x 2	F  x 8

!

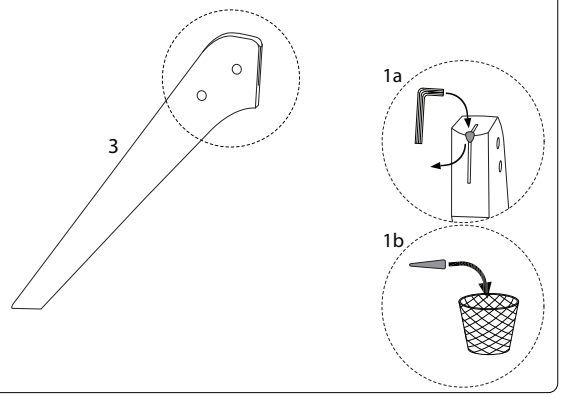
3
1a
1b

2

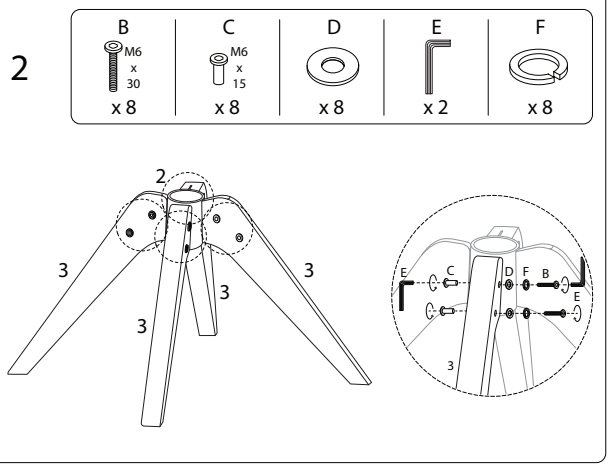
B
M6 x 30
x 8
C
M6 x 15
x 8
D
x 8
E
x 2
F
x 8
2
3
3
3
3
E
C
D
F
B
E
3

1

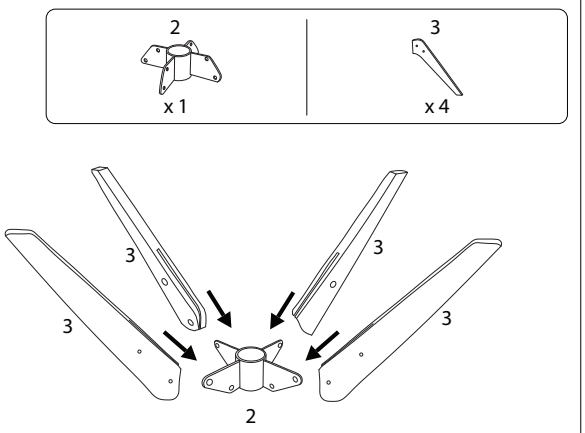
2
x 1
3
x 4
3
3
3
3
2

3

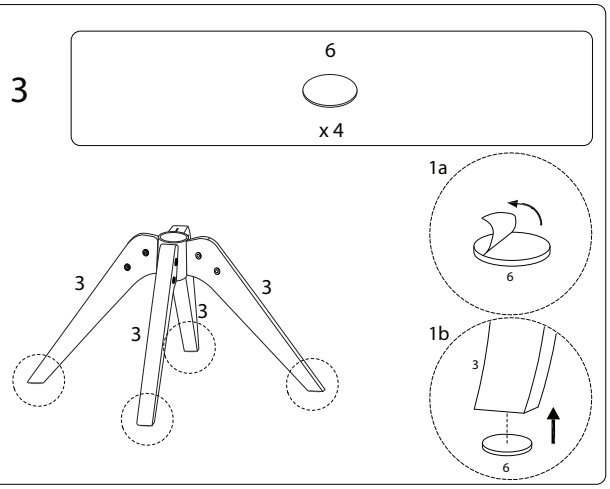
6
x 4
1a
6
3
3
3
3
1b
3
6

4

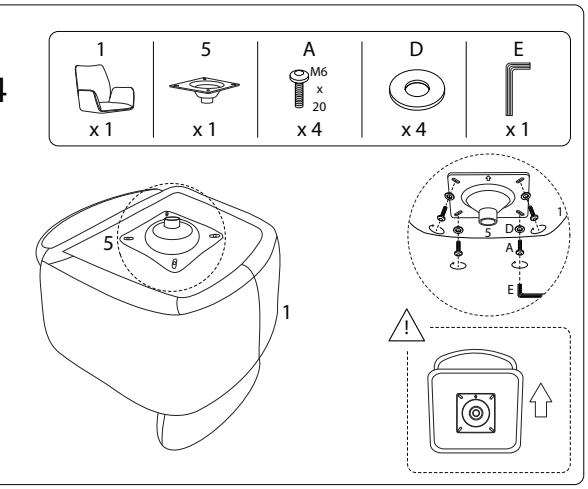
1
x 1
5
x 1
A
M6 x 20
x 4
D
x 4
E
x 1
5
1
1
5
D
A
E
!

6

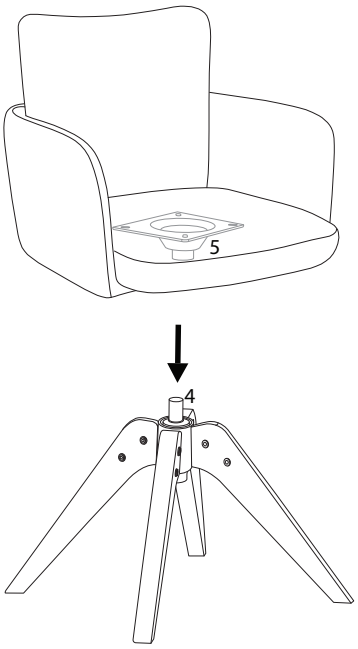
5
4

5

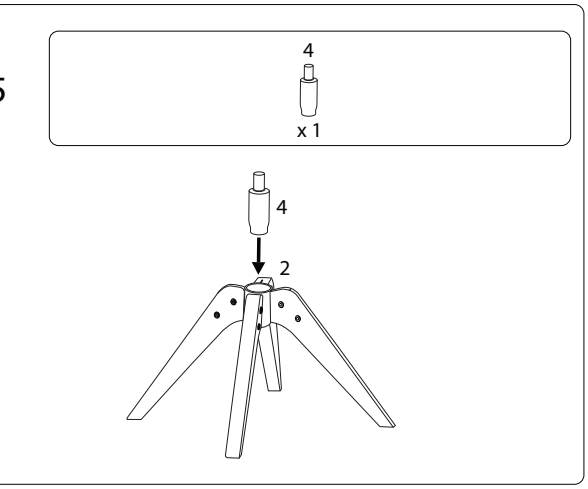
4
x 1
4
2