ASSEMBLY INSTRUCTION

SKU Number: 323072

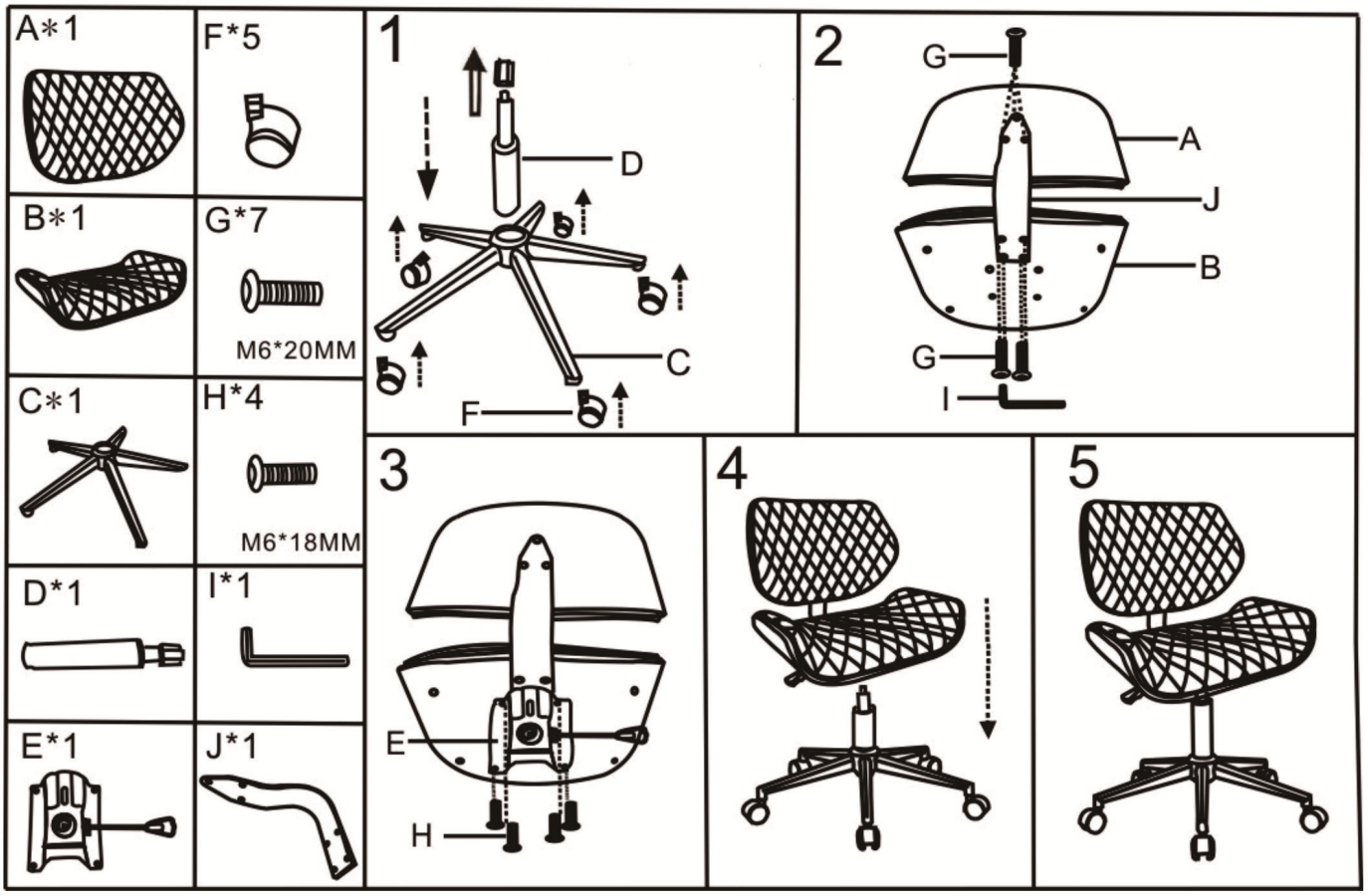

Importer:
CLP Trading GmbH
Triftenstrasse 93
32791 Lage
Germany
info@clp.de