NACKA

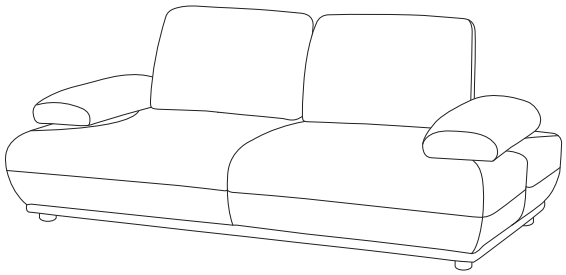

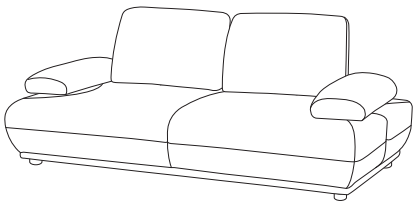

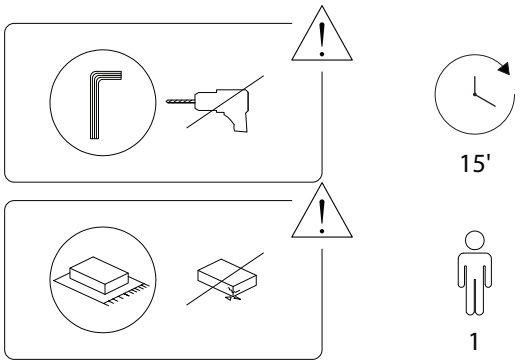
15'
1

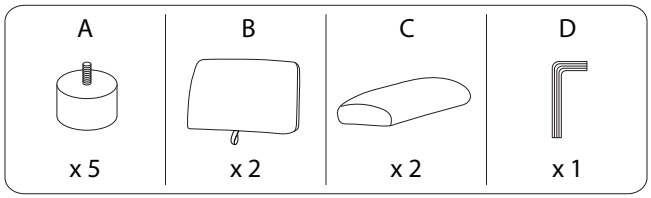
A
x 5
B
x 2
C
x 2
D
x 1

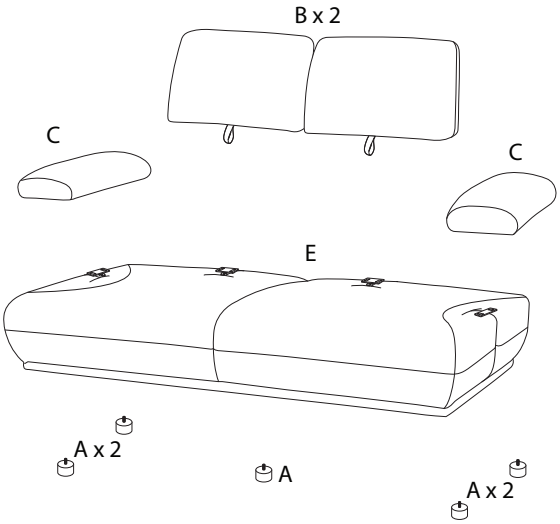
B x 2
C
C
E
A x 2
A
A x 2

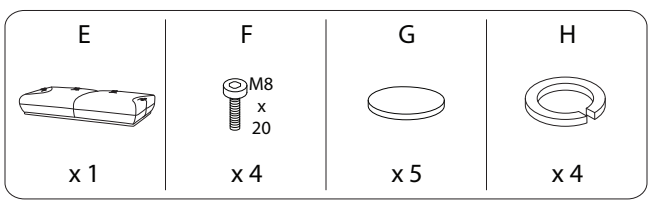
E
x 1
F
M8
x
20
x 4
G
x 5
H
x 4

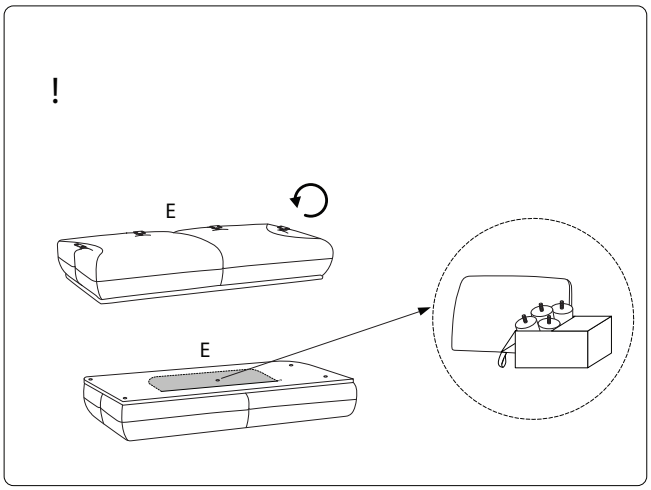
!
E
E

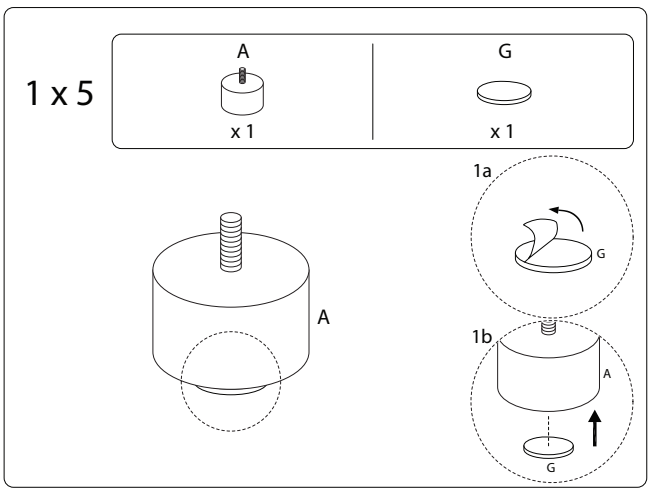
1 x 5
A
x 1
G
x 1
A
1a
G
1b
A
G

2

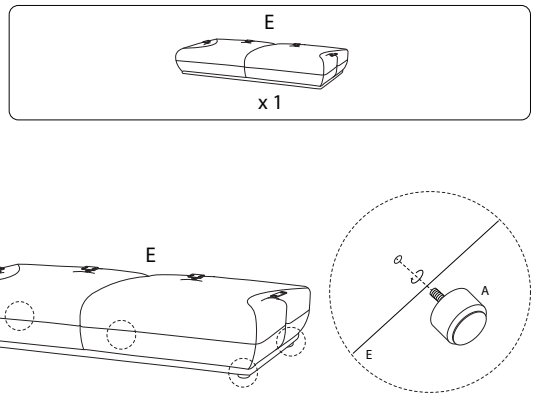

3

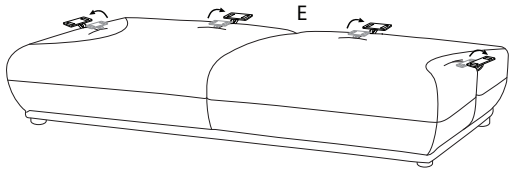

4

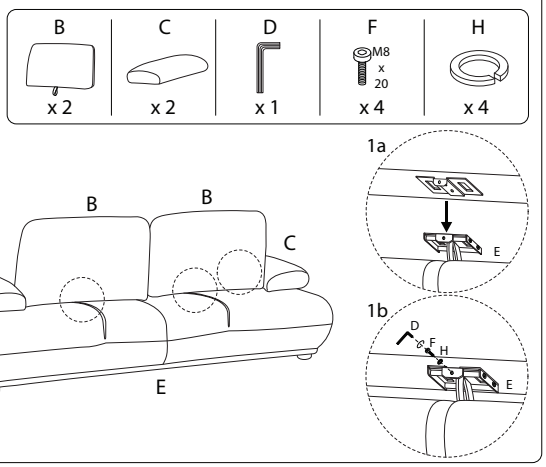

!

