BRADLEY

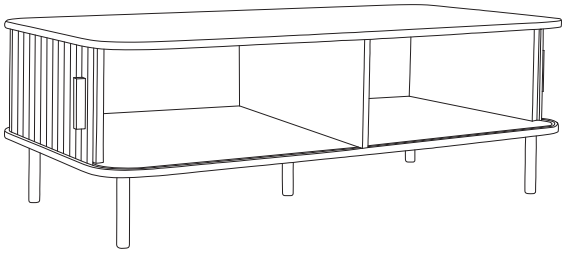

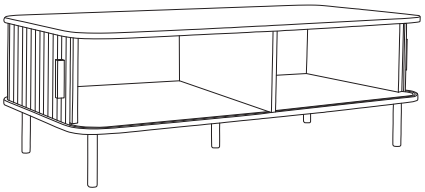

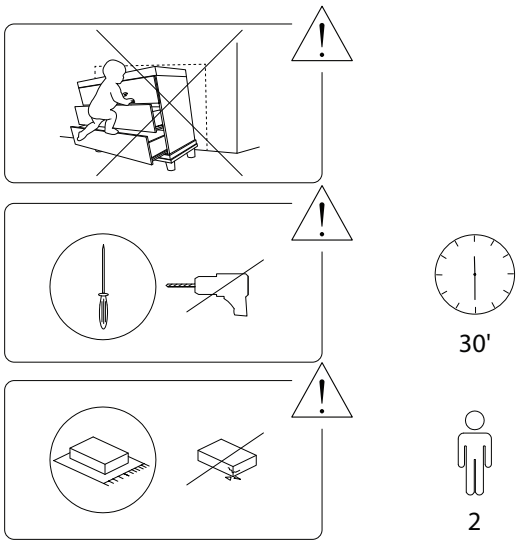

1/10

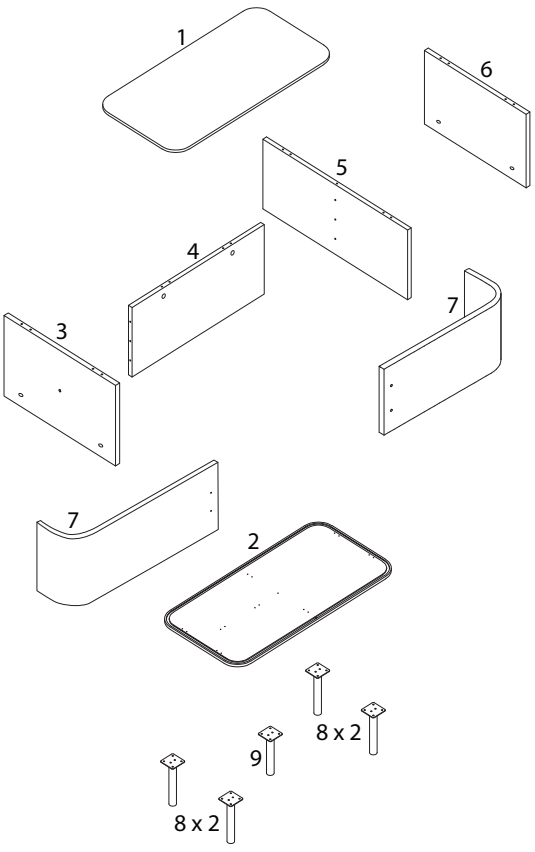

2/10

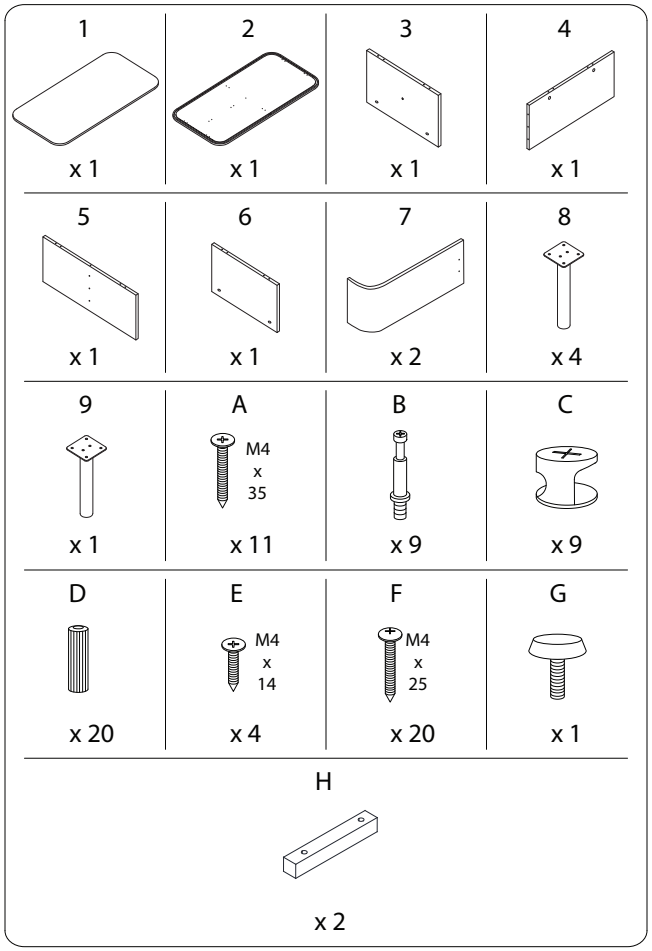

3/10

1

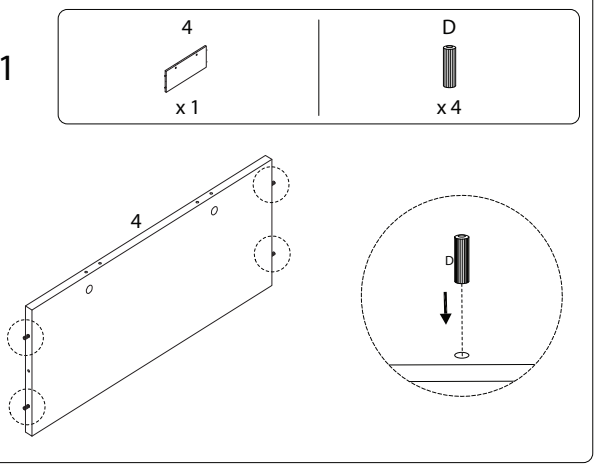
4
x 1
D
x 4
4
D

3

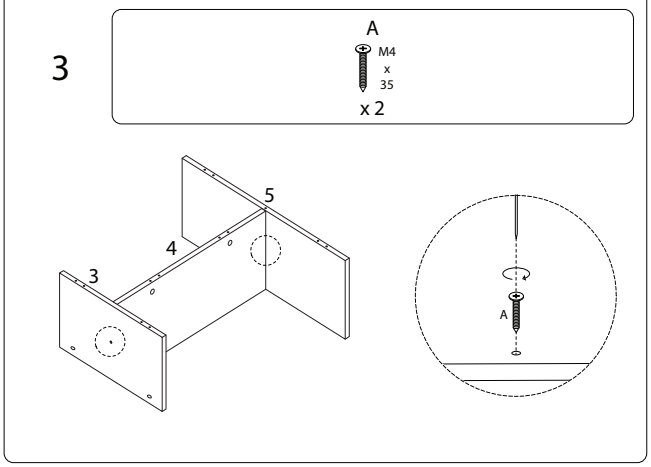
A
M4
x
35
x 2
5
4
3
A

2

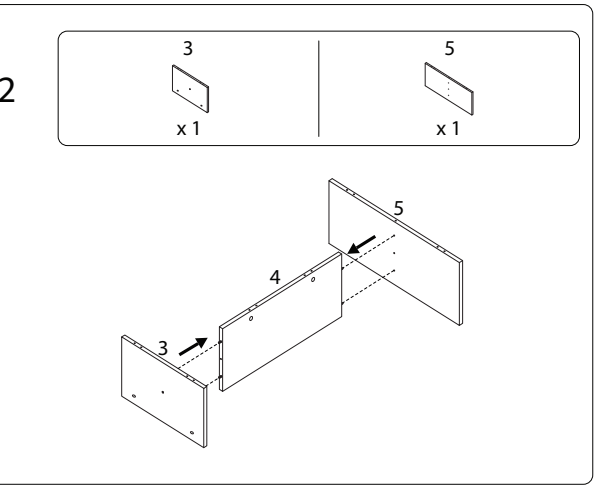
3
x 1
5
x 1
5
4
3

4

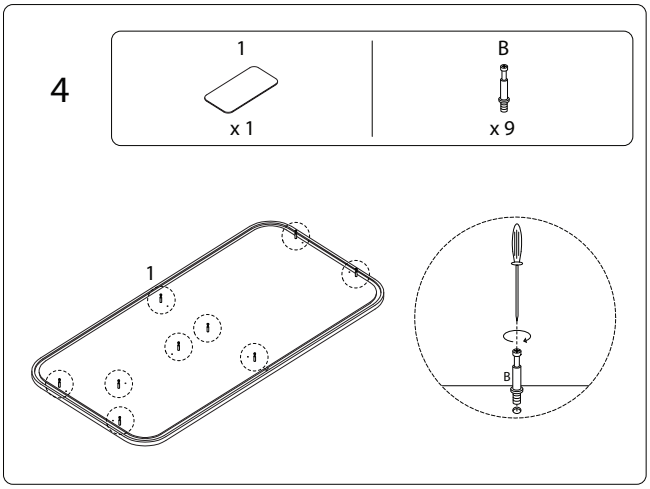
1
x 1
B
x 9
1
B

5

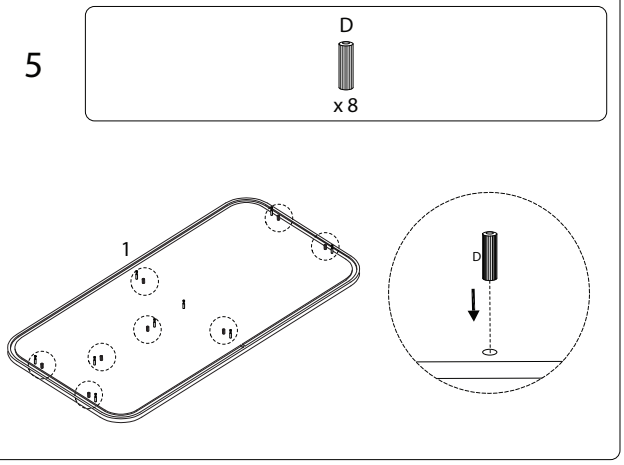
D
x 8
1
D

7

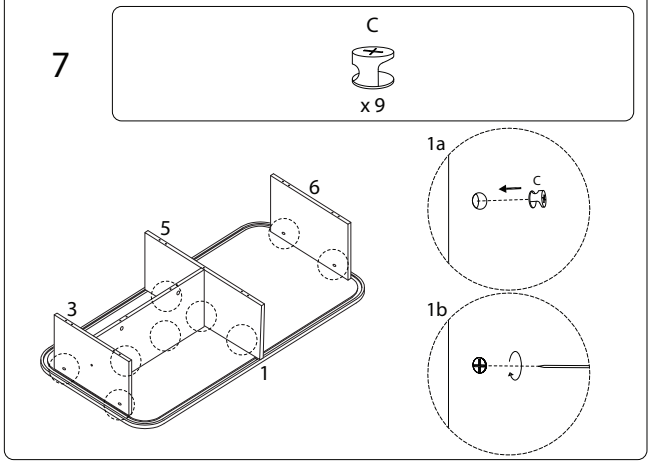
C
x 9
1a
C
6
5
3
1
1b

6

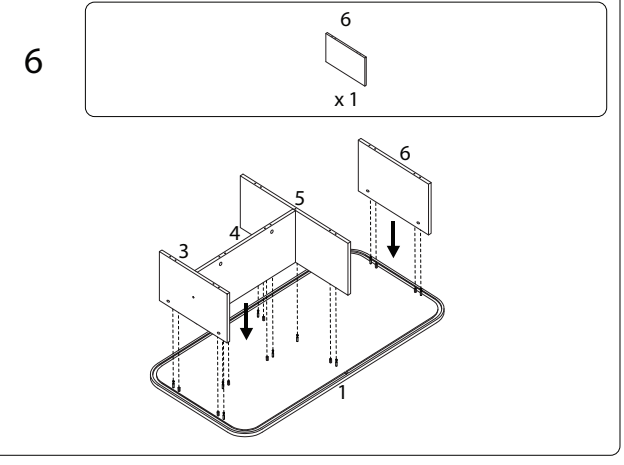
6
x 1
6
5
4
3
1

8

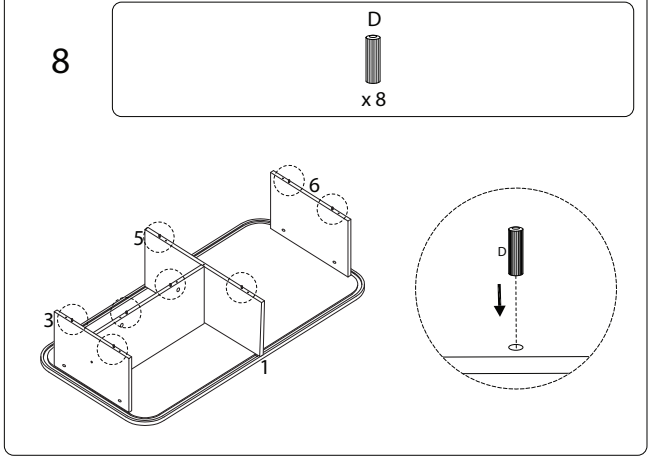
D
x 8
6
5
3
1
D

9 x 2

7	H	E
x 1	x 1	x 2

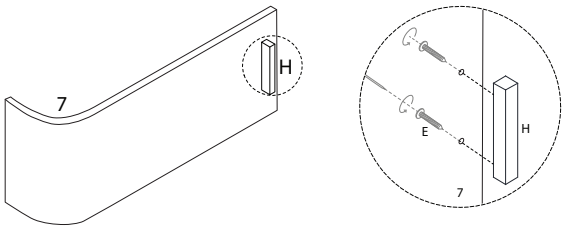

11

2	A
x 1	x 9

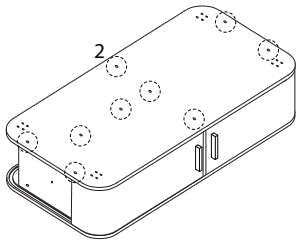

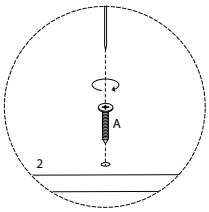

10

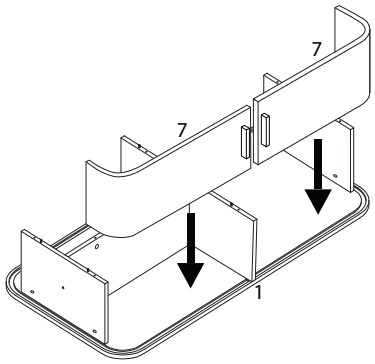

12

B	9	F
x 4	x 1	x 20

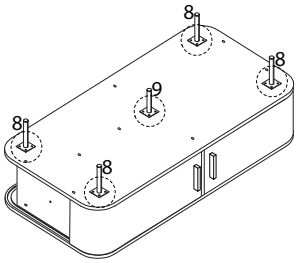

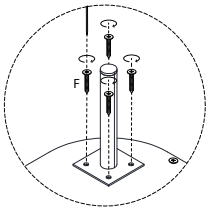

13

G
x 1

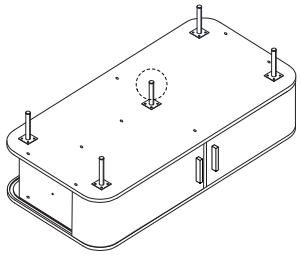

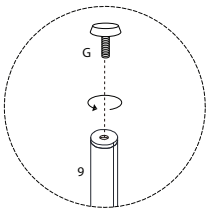

!

