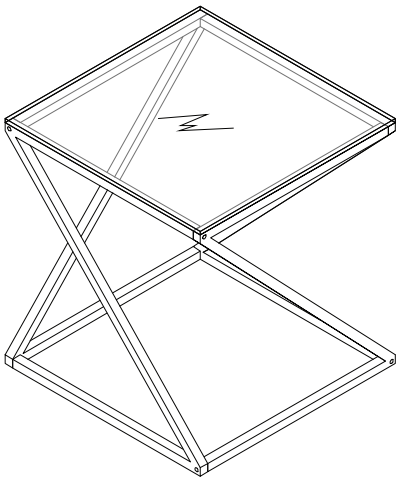

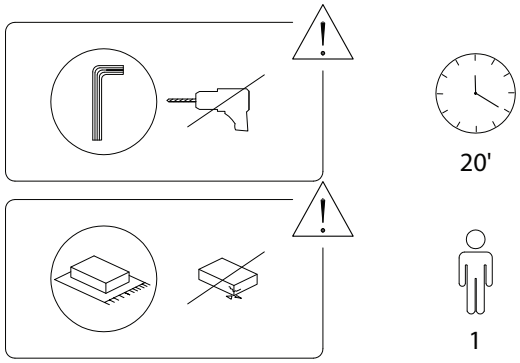

1/3

1087/BEVERLY/230719/

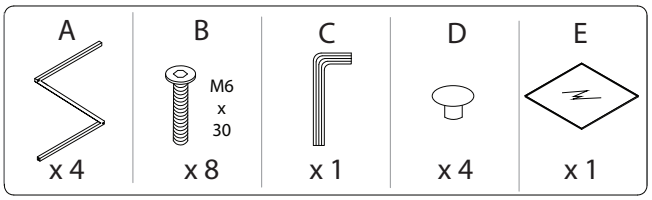

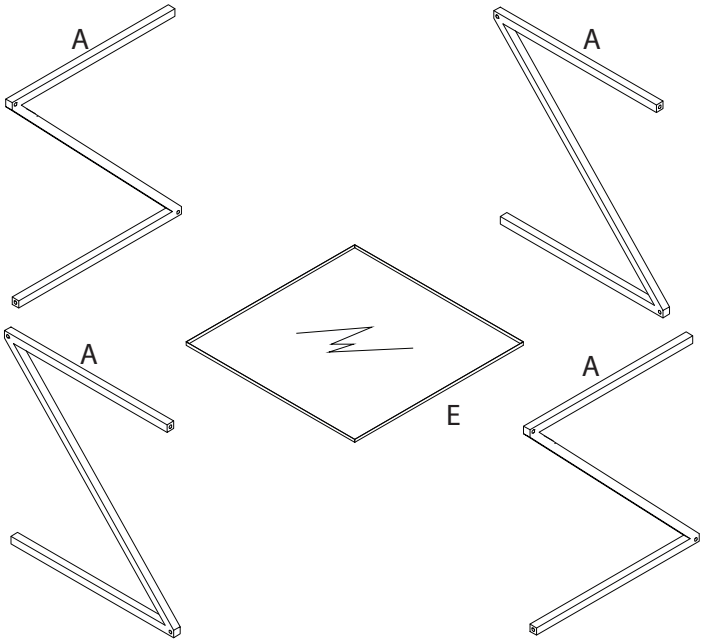

2/3

1087/BEVERLY/230719/

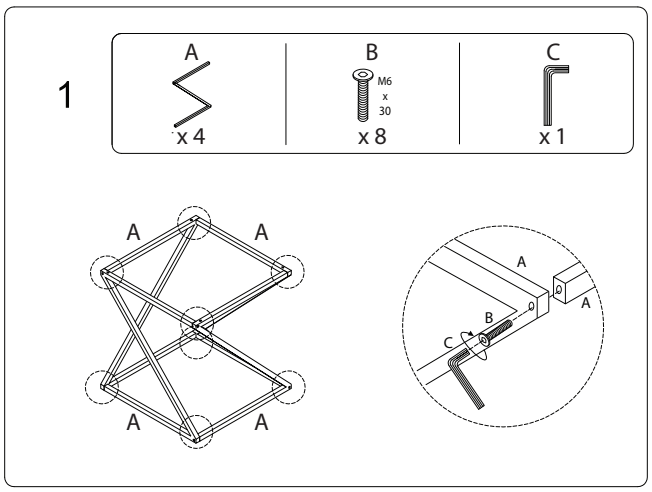

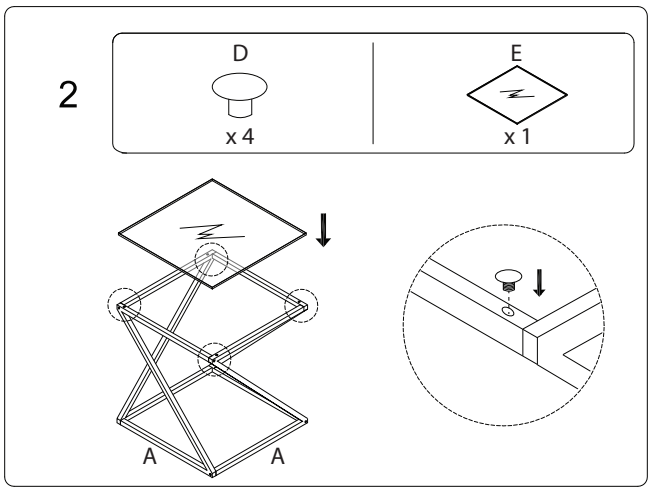

3/3

1087/BEVERLY/230719/