MONARCH





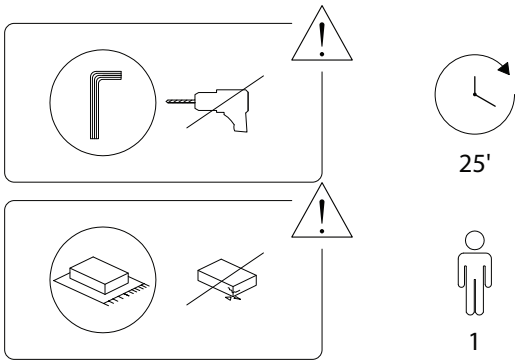

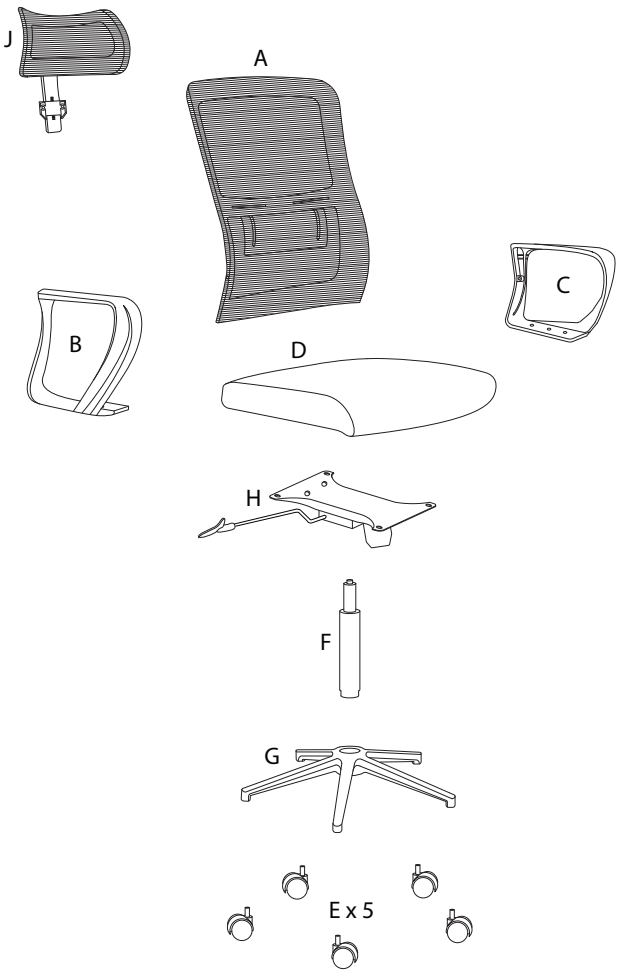

A  x 1	B  x 1	C  x 1
D  x 1	E  x 5	F  x 1
G  x 1	H 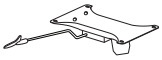 x 1	I  x 6
J  x 1	K  x 1	L  x 2
M  x 6	N  x 4	

1

E	G
x 5	x 1

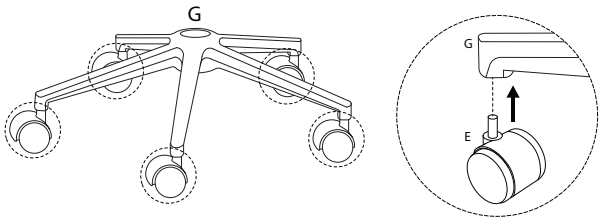

2

F
x 1

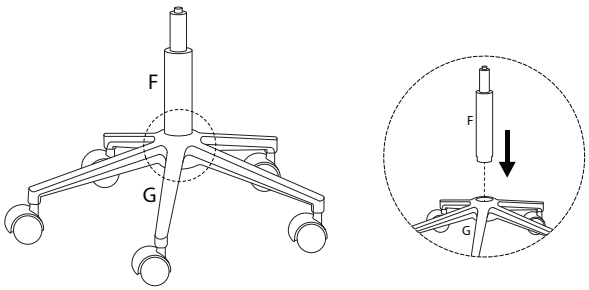

3

A	B	C	I	K
x 1	x 1	x 1	M6 x 20 x 2	x 1

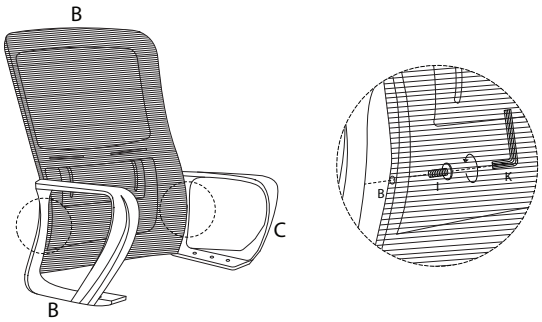

4

D	K	M
x 1	x 1	M6 x 35 x 6

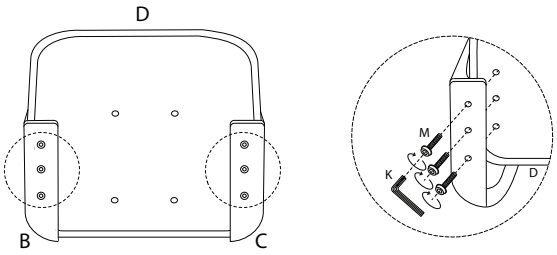

5

H	K	I	N
x 1	x 1	M6 x 20 x 4	x 4

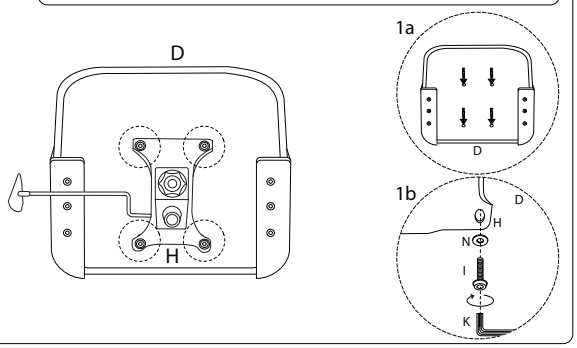

6

J	K	L
x 1	x 1	M6 x 25 x 2

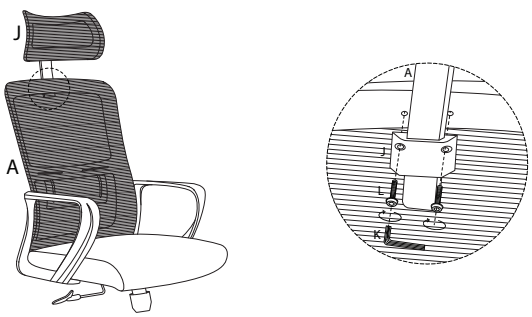

7

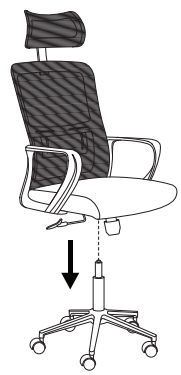

!

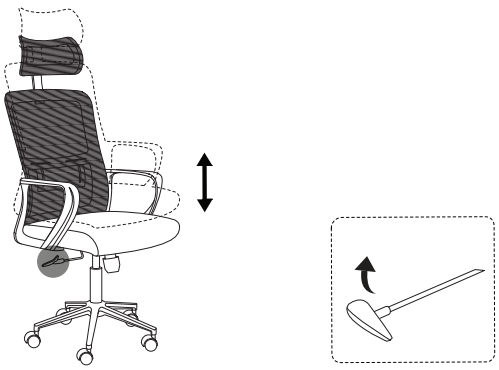

!



!



2506/MONARCH/220525/