CAVI

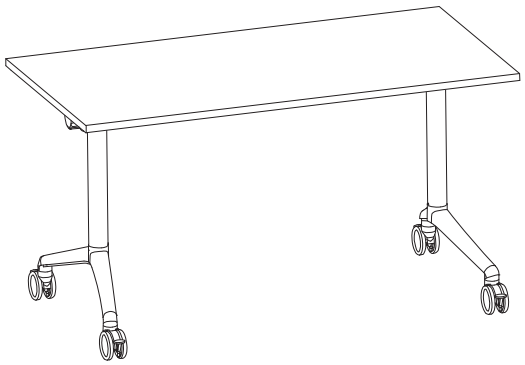

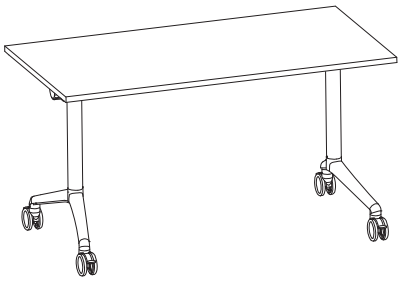

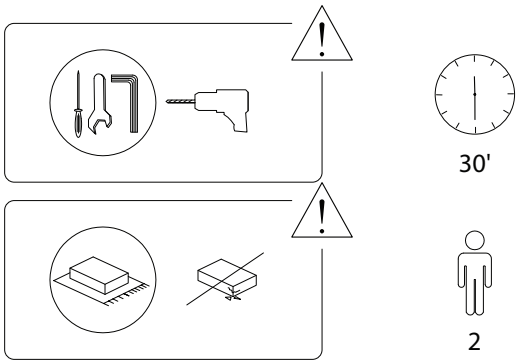

1/9

2249/CAVI/050724/

A	B
	
x 1	x 1

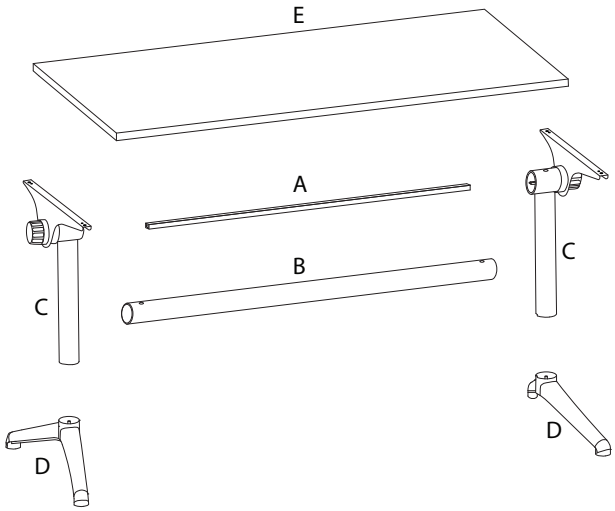

C	D	E
		
x 2	x 2	x 1

2/9

2249/CAVI/050724/

1	2	3
 M8		
x 1	x 1	x 4
4	**5**	**6**
 M16 x 8		 M5 x 20
x 2	x 1	x 6
7	**8**	**9**
 M5		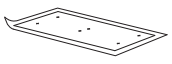
x 1	x 4	x 1

3/9

2249/CAVI/050724/

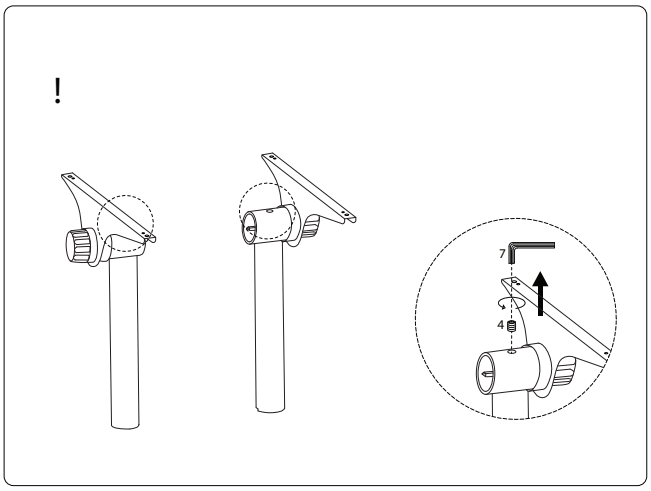
!
7
4

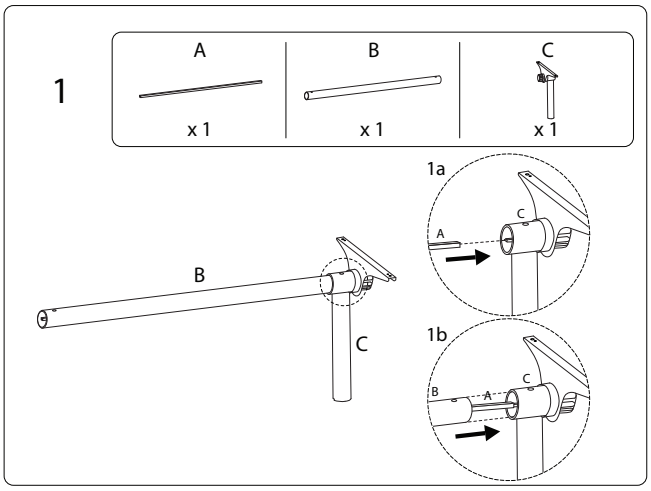
1
A
x 1
B
x 1
C
x 1
1a
1b
B
C

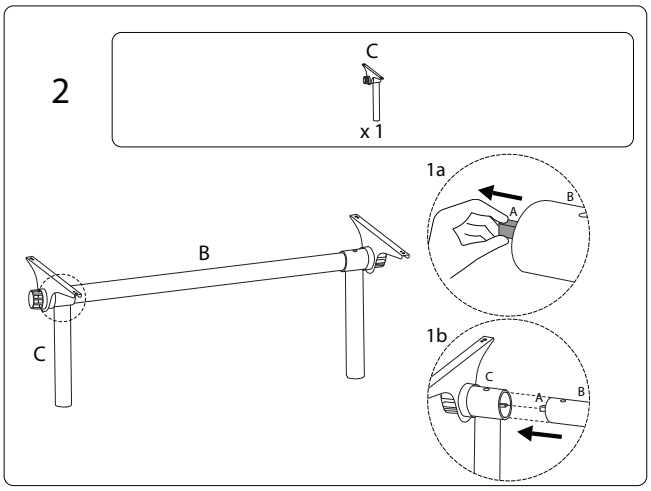
2
C
x 1
1a
1b
B
C

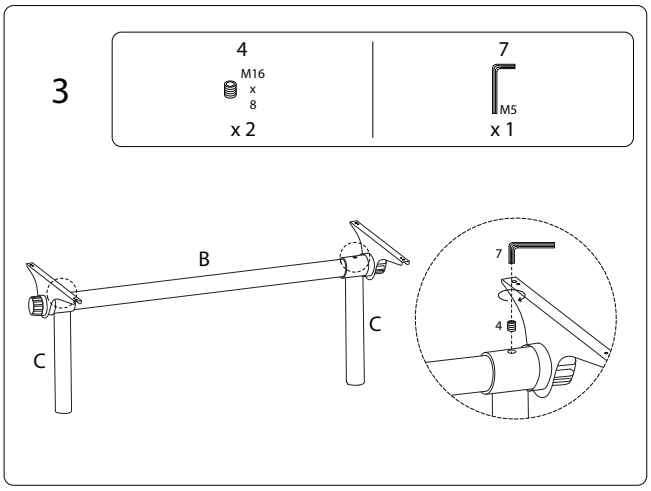
3
4
M16
x
8
x 2
7
M5
x 1
B
C
7
4

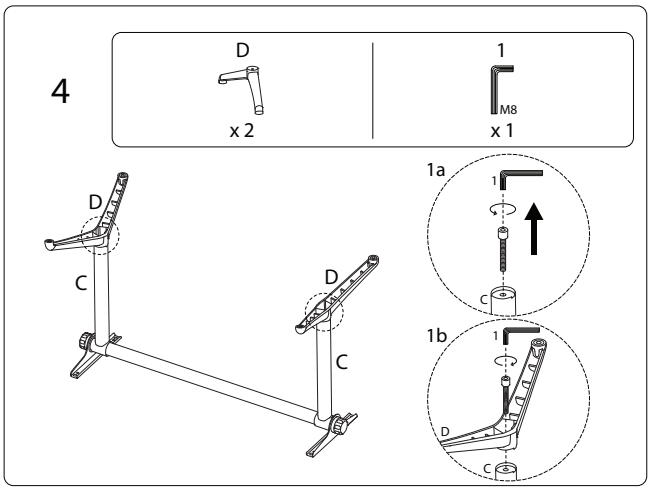
4
D
x 2
1
M8
x 1
1a
1b
D
C

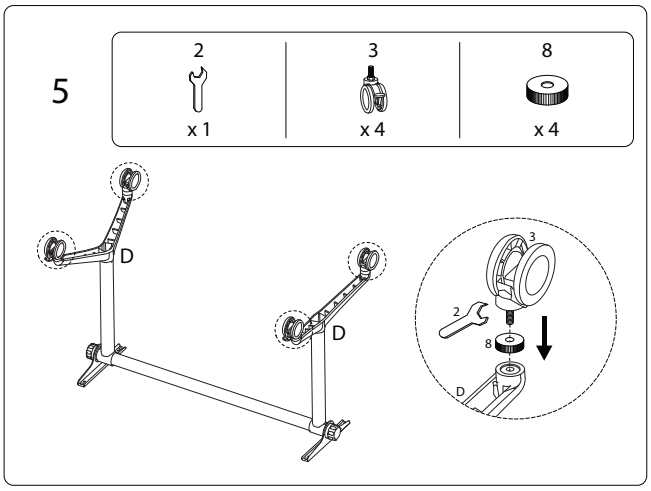
5
2
x 1
3
x 4
8
x 4
D
3
2
8

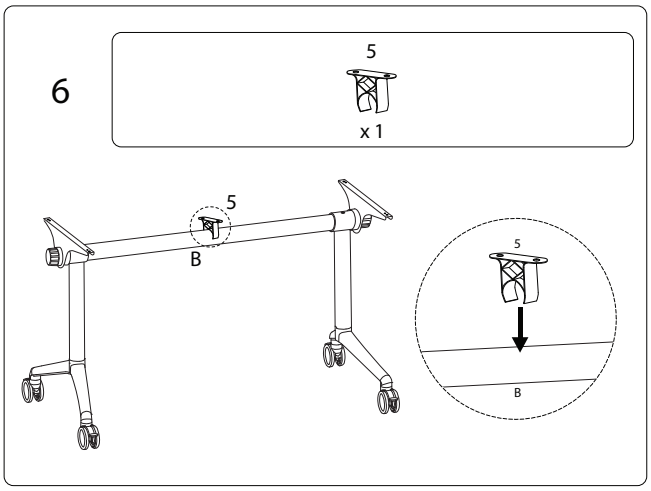
6
5
x 1
5
B

7

E

x 1

9

x 1

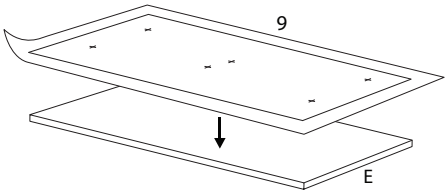

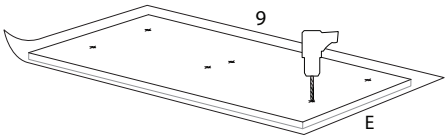

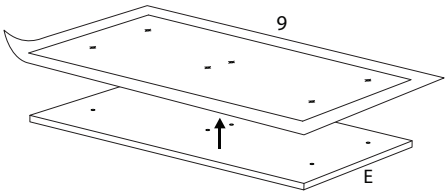

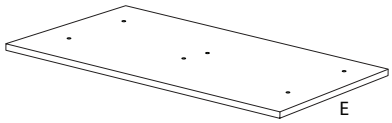

8

6

M5 x 20

x 6

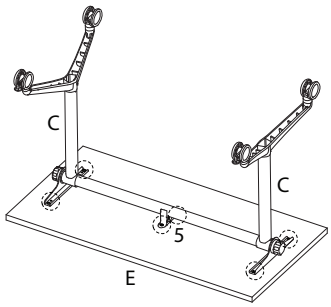

!

