CARAQUET

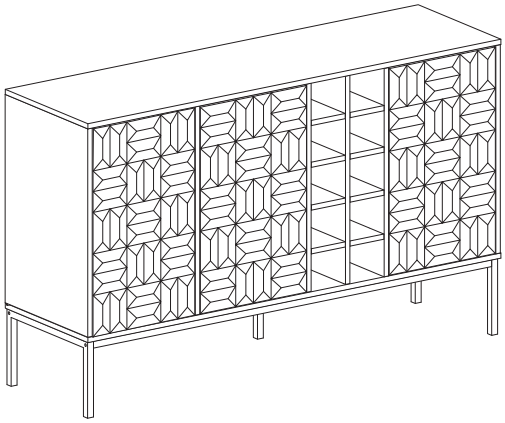

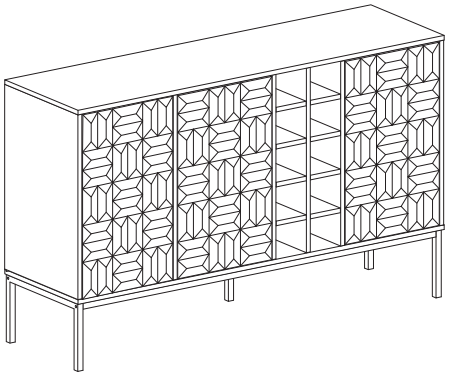

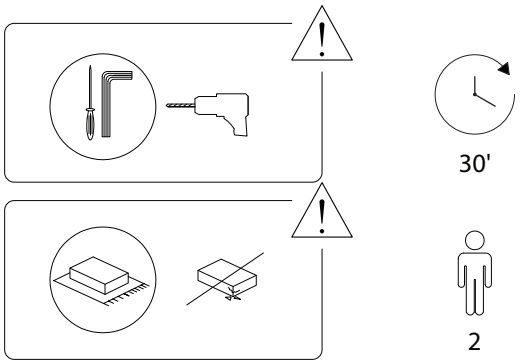
30'
2

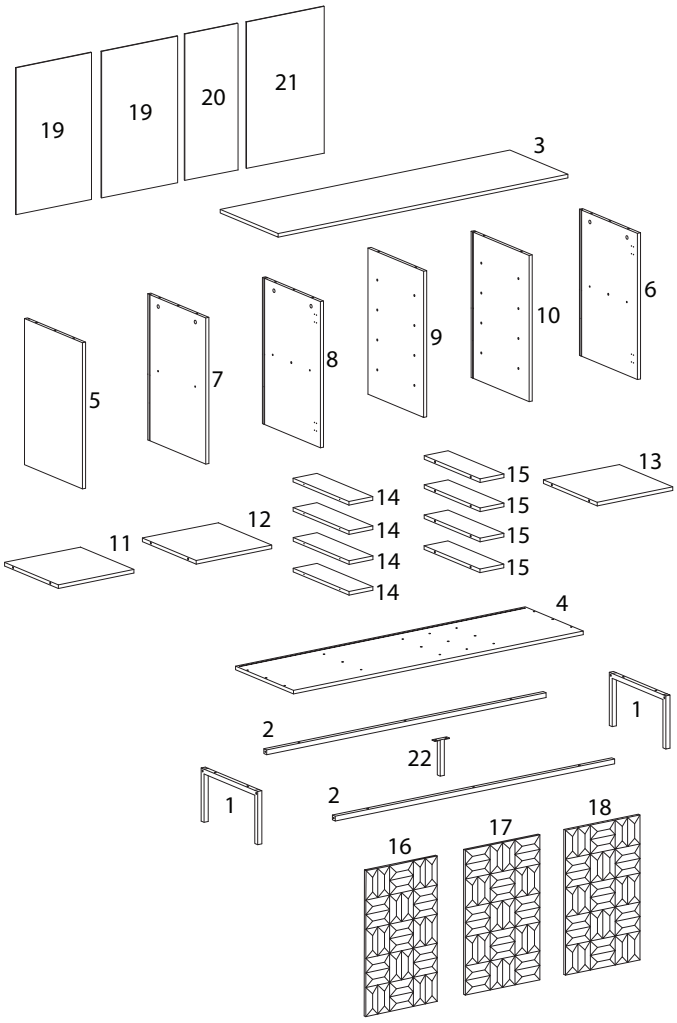
19
19
20
21
3
5
7
8
9
10
6
15
15
15
15
13
14
14
14
14
12
11
4
1
2
22
1
2
16
17
18

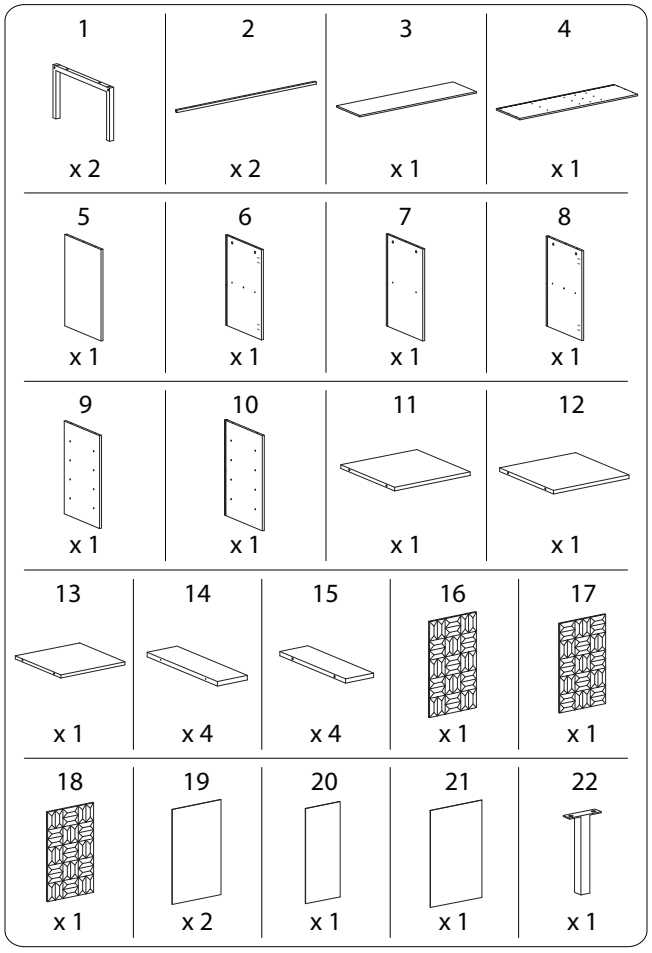
1 x 2
2 x 2
3 x 1
4 x 1
5 x 1
6 x 1
7 x 1
8 x 1
9 x 1
10 x 1
11 x 1
12 x 1
13 x 1
14 x 4
15 x 4
16 x 1
17 x 1
18 x 1
19 x 2
20 x 1
21 x 1
22 x 1

A	B	C	D
x 20	x 20	x 34	M7 x 40 x 14
E	F	G	H
M3.5 x 12 x 46	x 8	M6 x 35 x 4	M6 x 30 x 10
J	K	L1	L2
x 6	M4 x 1	x 3	x 3
L3	M	N	O	P
x 3	M3 x 10 x 3	M4 x 30 x 2	x 20	x 8
Q	R	S	T	U
M3 x 16 x 8	x 2	x 2	M6 x 12 x 2	x 1

1

3	4	5	6	A	C
x 1	x 1	x 1	x 1	x 14	x 15

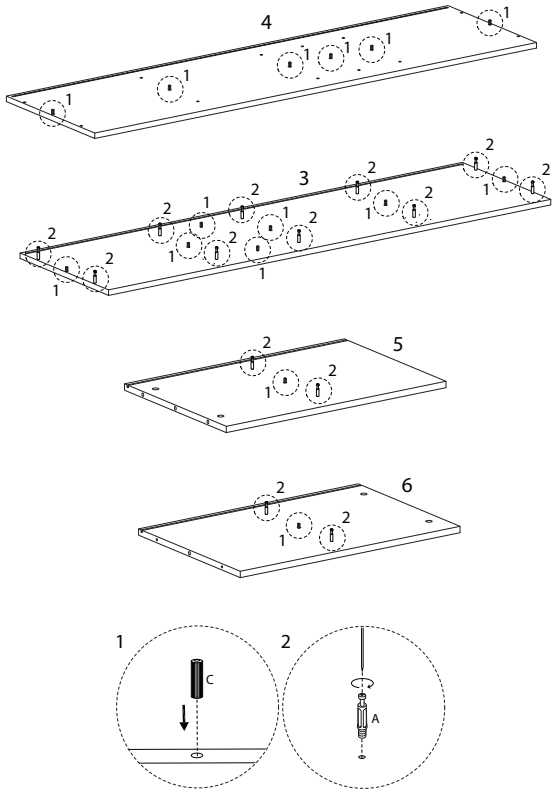

2

7	8	10	A	C
x 1	x 1	x 1	x 6	x 3

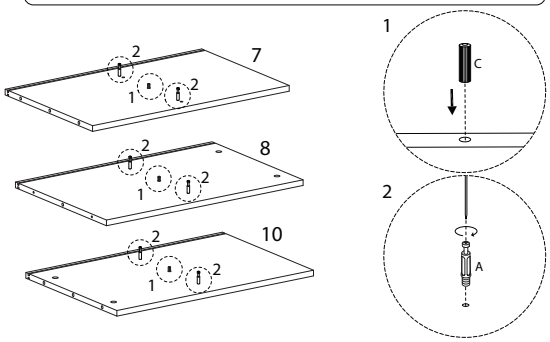

4

E	L1	L2
M3.5 x 12 x 6	x 3	x 3

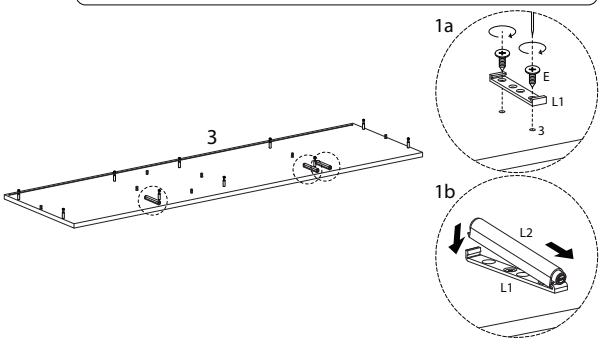

3 x 4

14	15	C	F
x 1	x 1	x 4	x 2

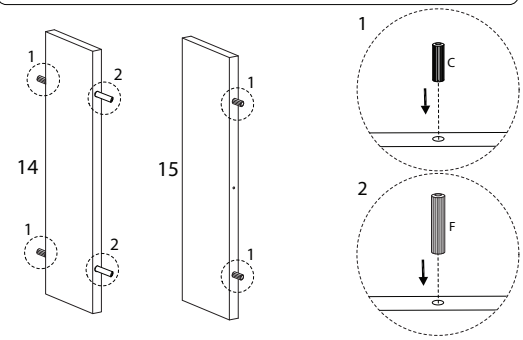

5

16	17	18	E	J	L3	M
x 1	x 1	x 1	M3.5 x 12 x 12	x 6	x 3	M3 x 10 x 3

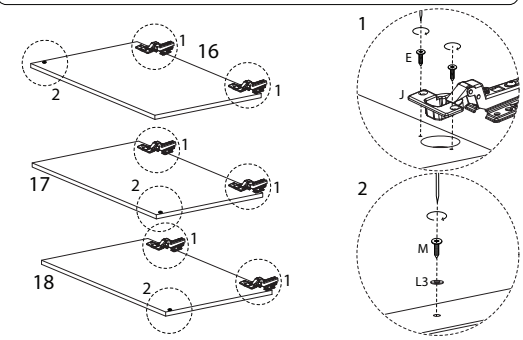

6

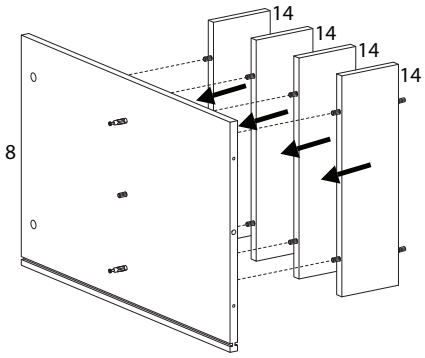

7

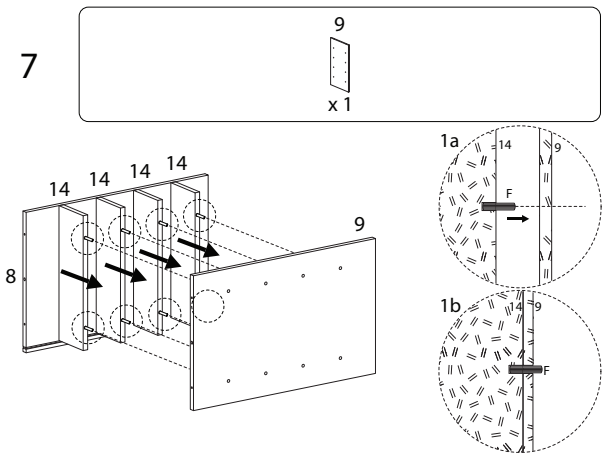

8

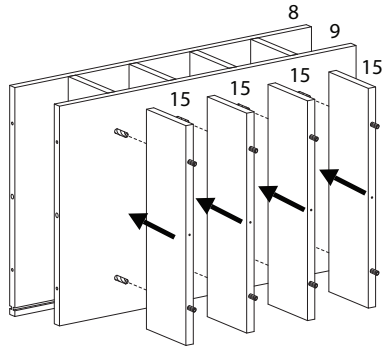

9

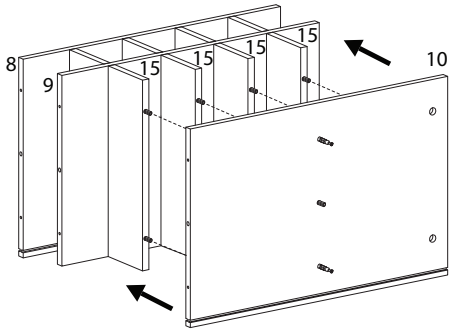

10

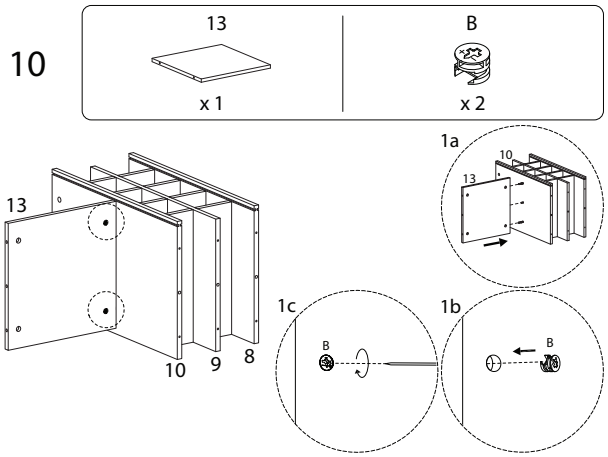

11

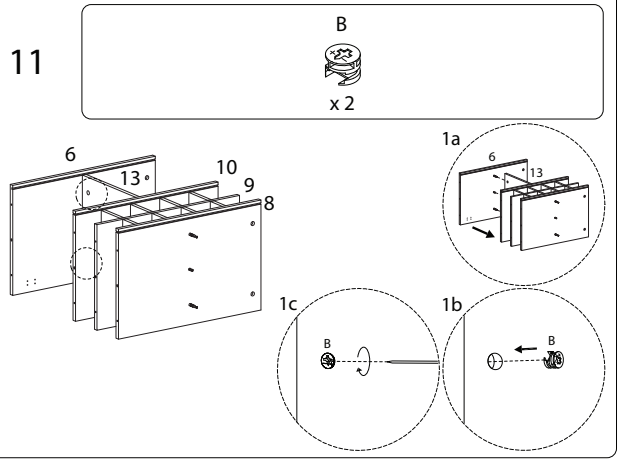

12

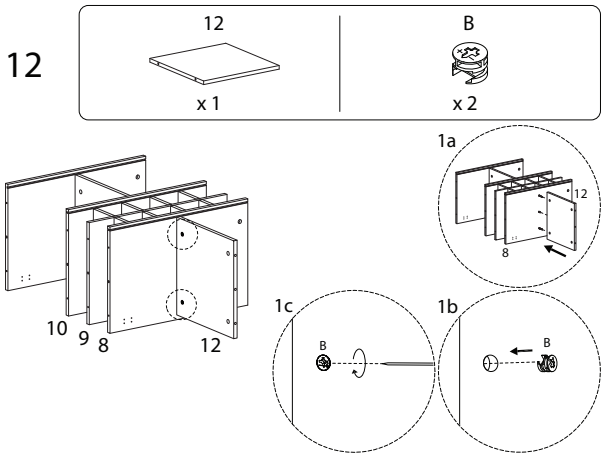

13

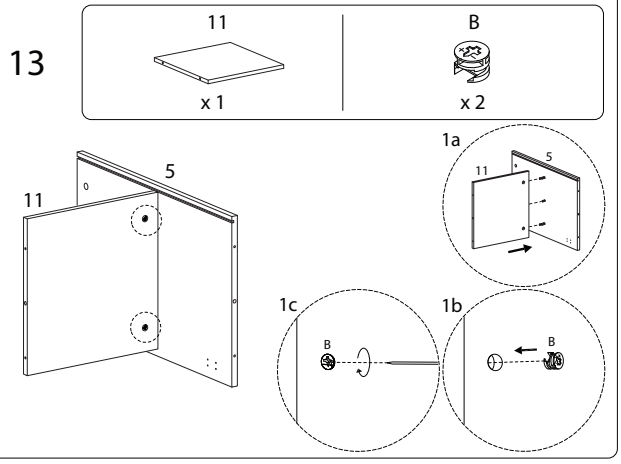

14

D	K
M7 x 40	M4
x 2	x 1

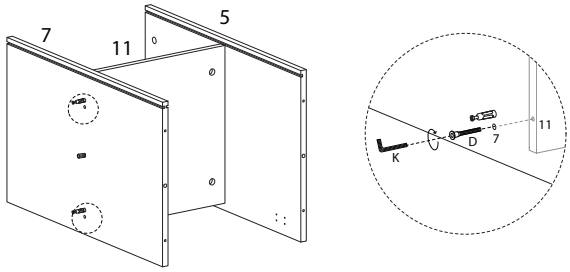

15

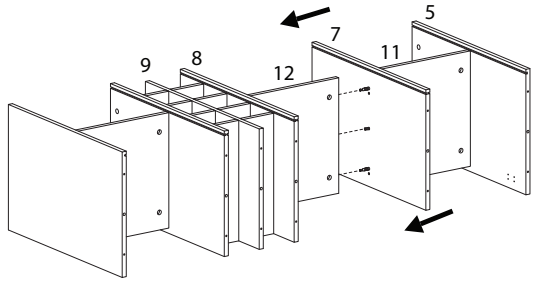

16

B
x 2

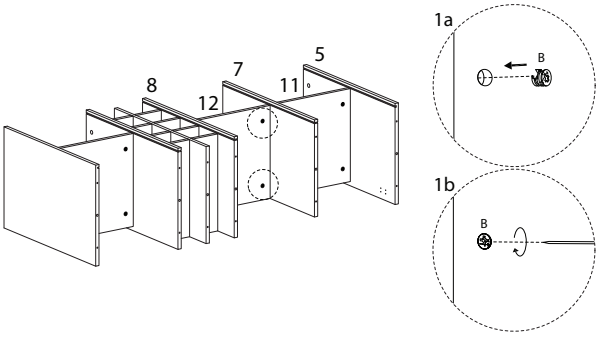

17

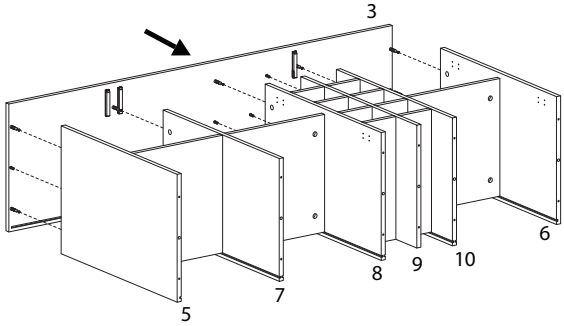

18

B
x 10

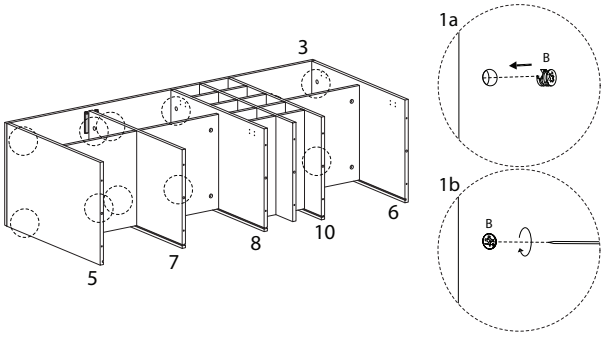

20

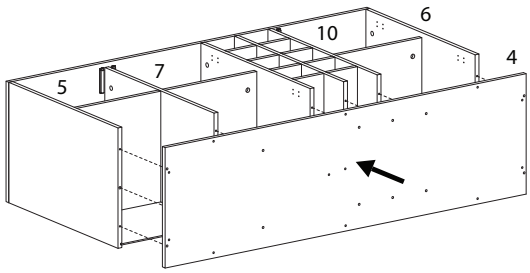

19

19	20	21
x 2	x 1	x 1

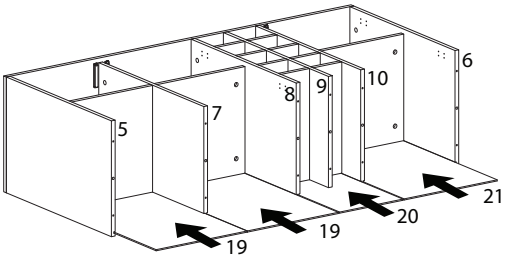

21

D	K
M7 x 40	M4
x 12	x 1

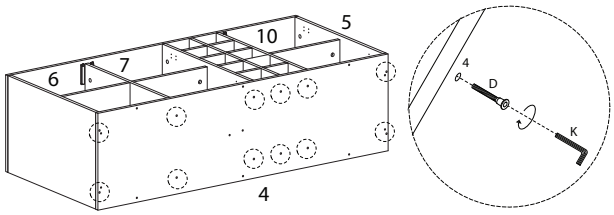

22

1	2	G	K
x 2	x 2	M6 x 35 x 4	M4 x 1

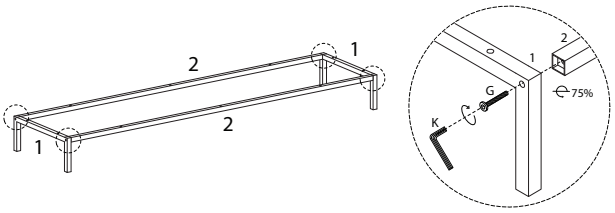

23

H	K
M6 x 30 x 10	M4 x 1

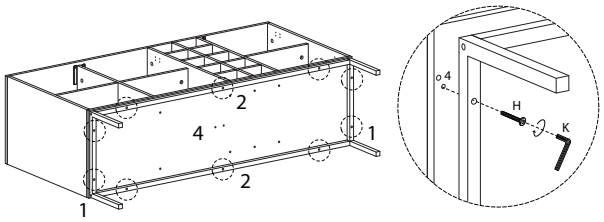

24

K
M4 x 1

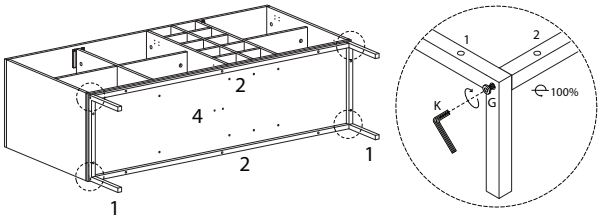

25

22	K	T	U
x 1	M4 x 1	M6 x 12 x 2	x 1

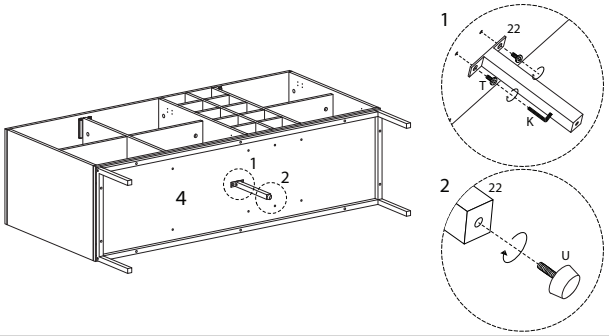

26

P	Q
x 8	M3 x 16 x 8

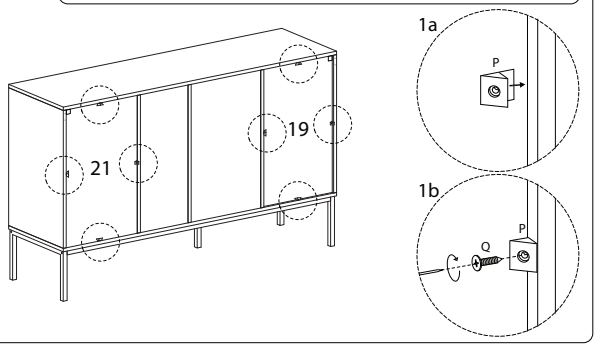

27

E	R
M3.5 x 12 x 4	x 2

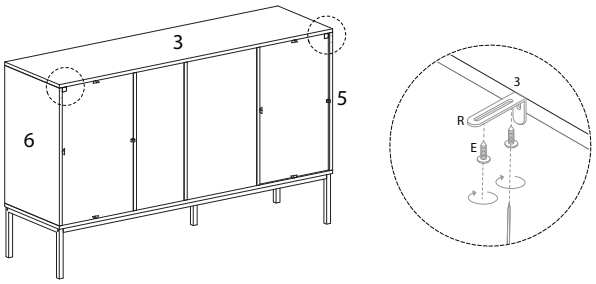

28

E
M3.5 x 12 x 24

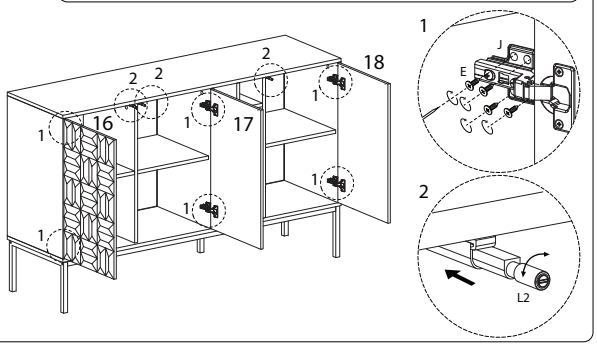

29

O
x 20

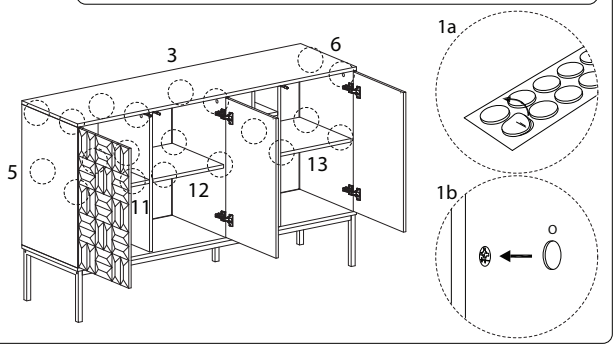

30

N	S
M4 x 30	
x 2	x 2

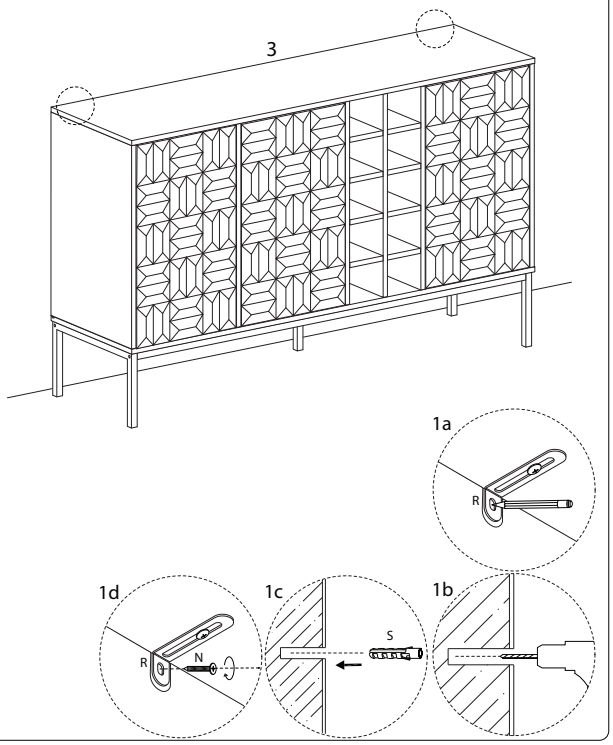
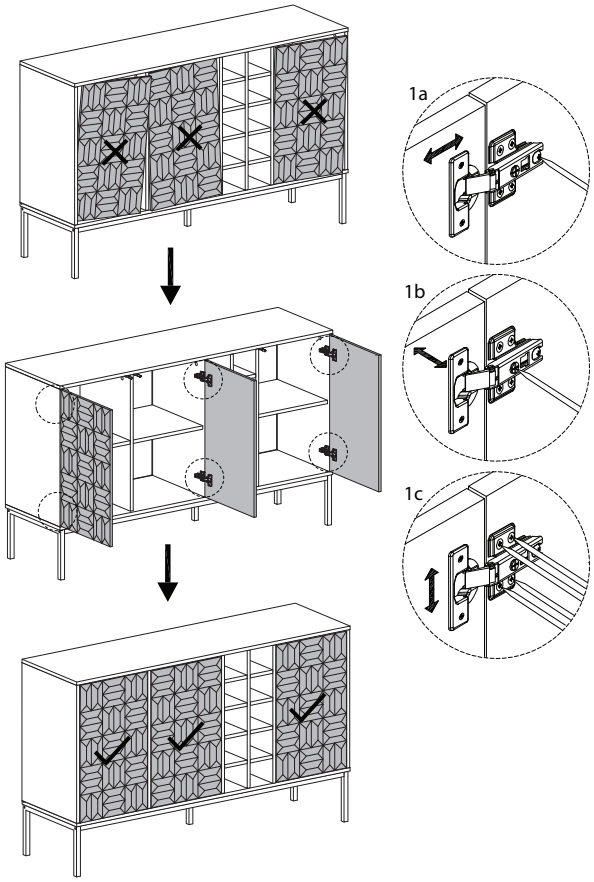
31