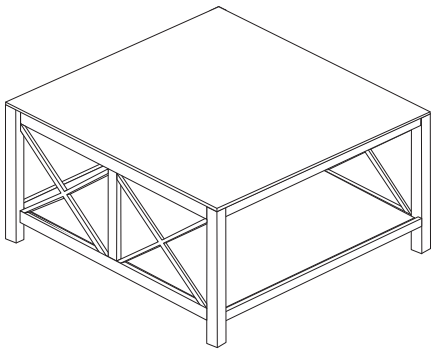

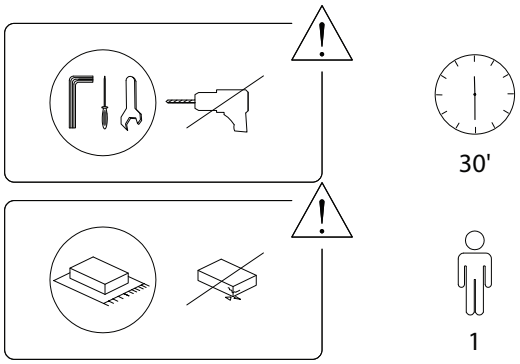
30'
1





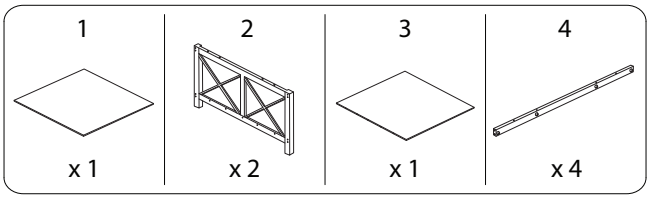
1
x 1
2
x 2
3
x 1
4
x 4

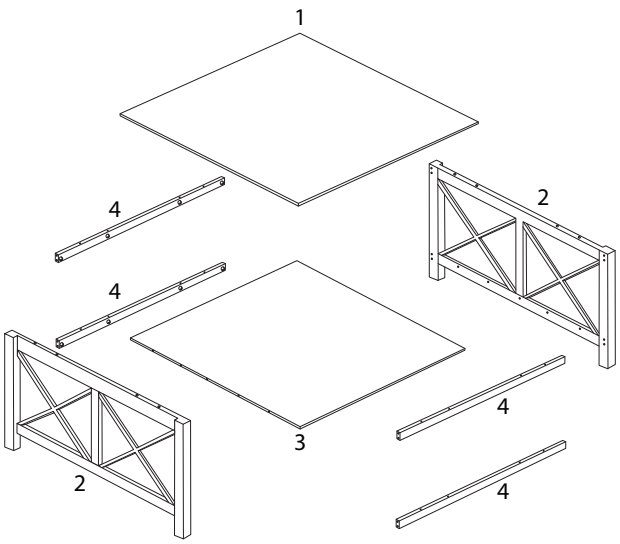
1
4
2
4
4
3
2

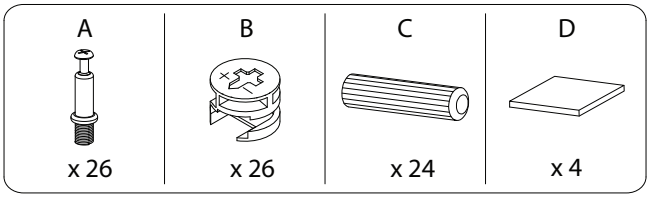
A
x 26
B
x 26
C
x 24
D
x 4





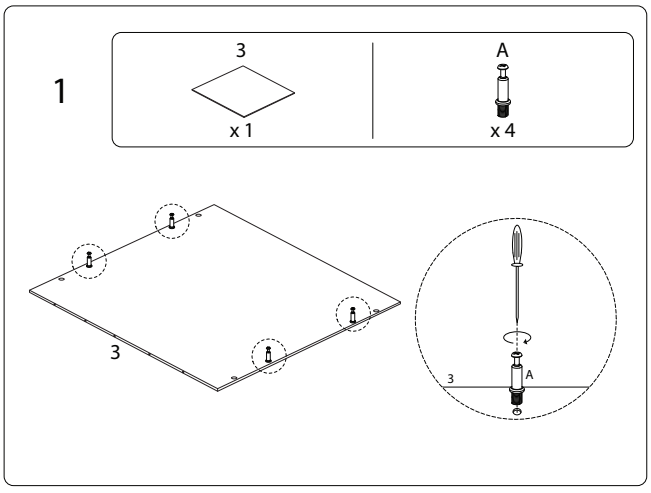
1
3
x 1
A
x 4
3
3
A

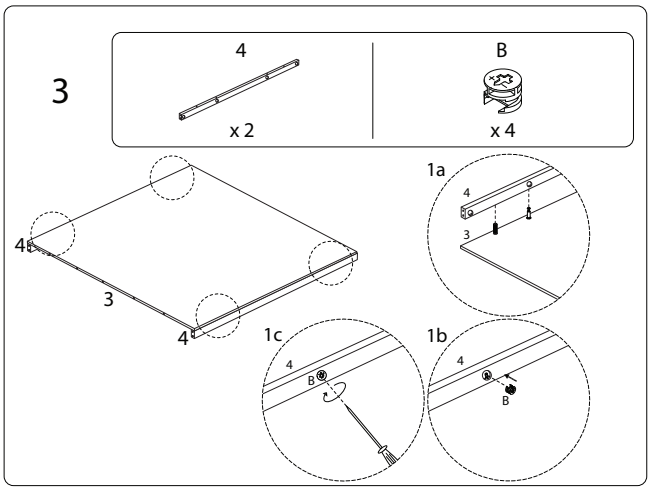
3
4
x 2
B
x 4
1a
4
3
4
3
4
1c
4
B
1b
4
B

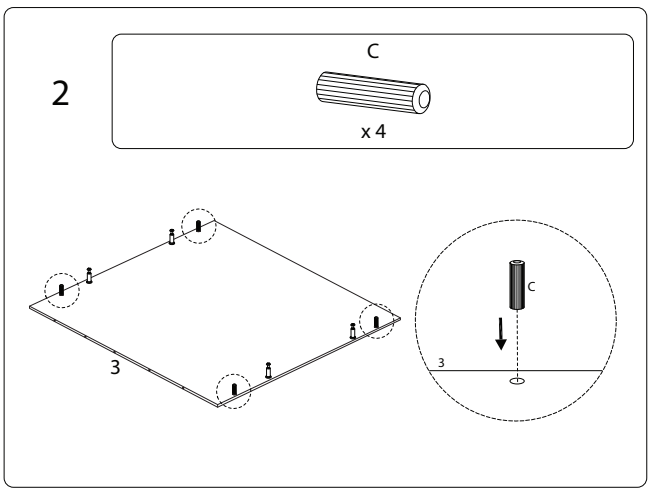
2
C
x 4
3
C
3





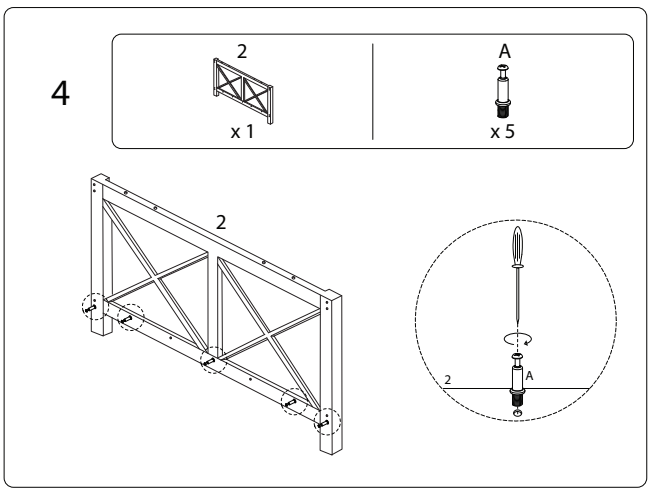
4
2
x 1
A
x 5
2
2
A

5

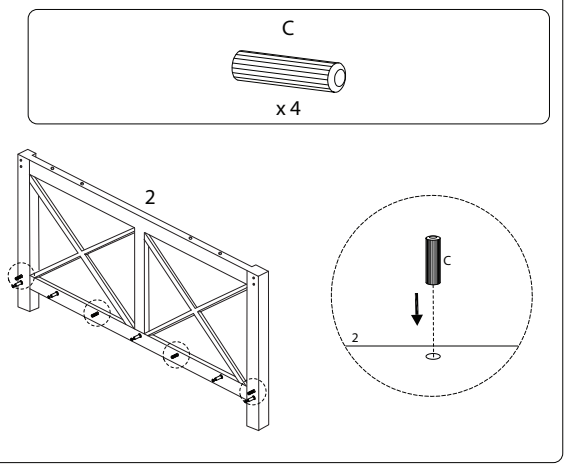


6

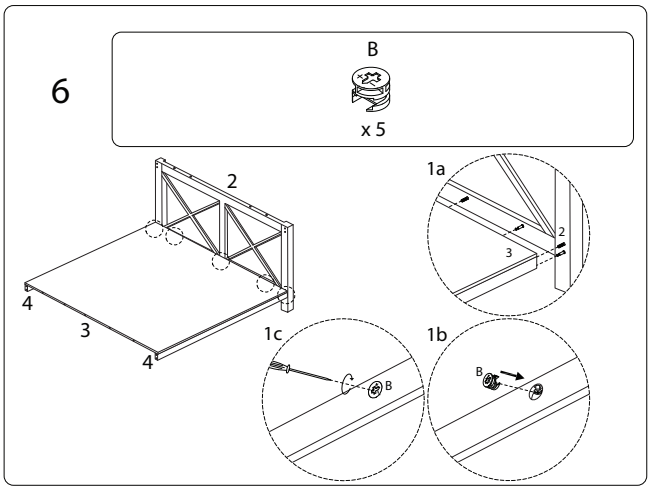






7

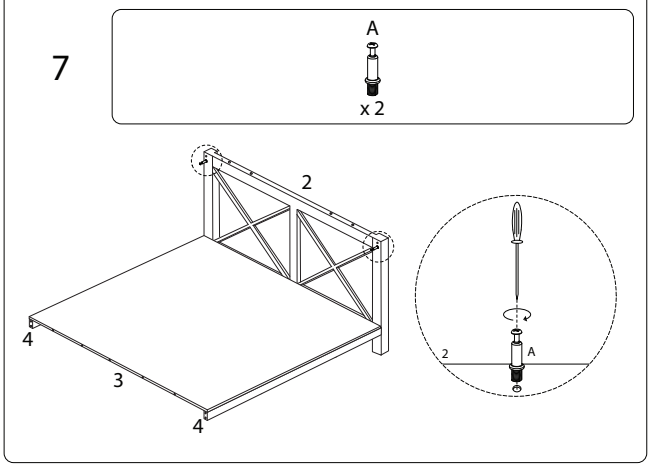


8

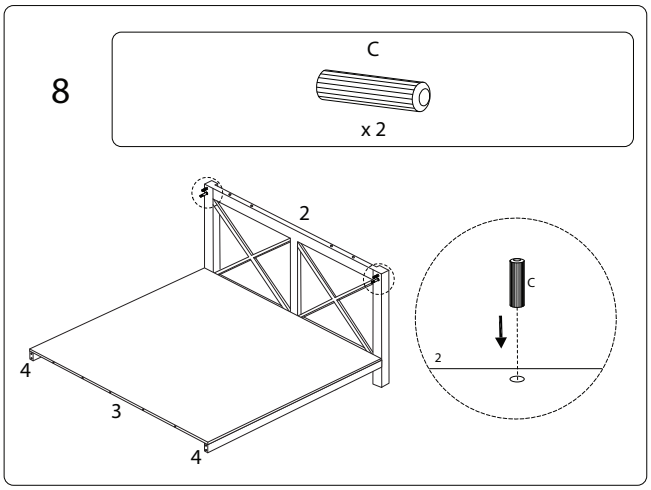






9

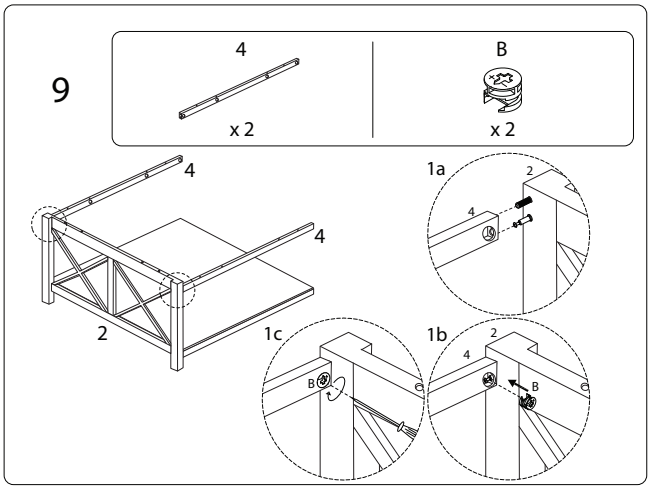


10

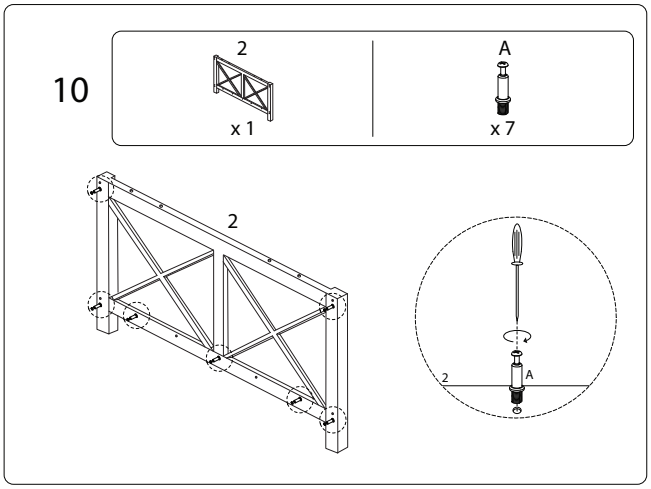






11

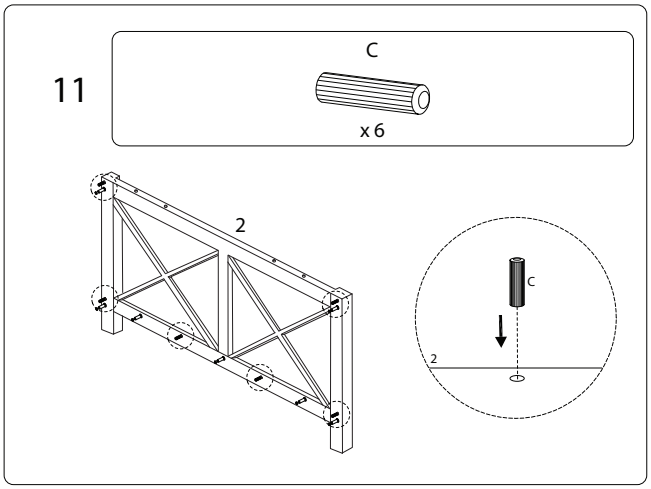


12

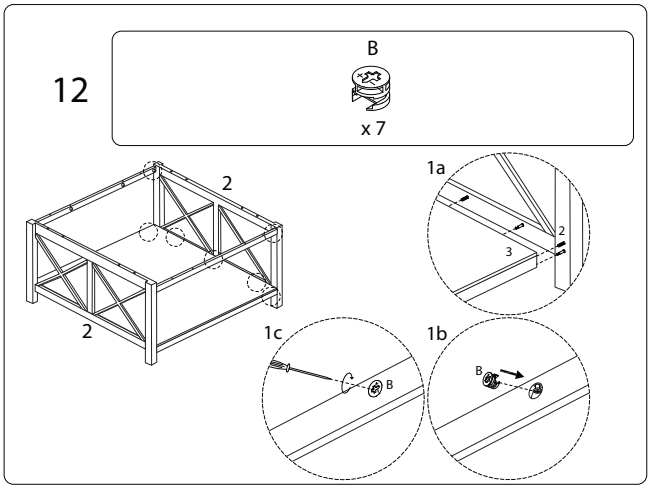

13

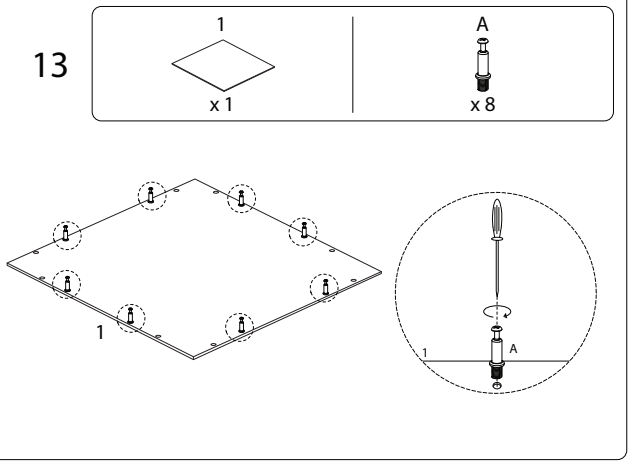


14

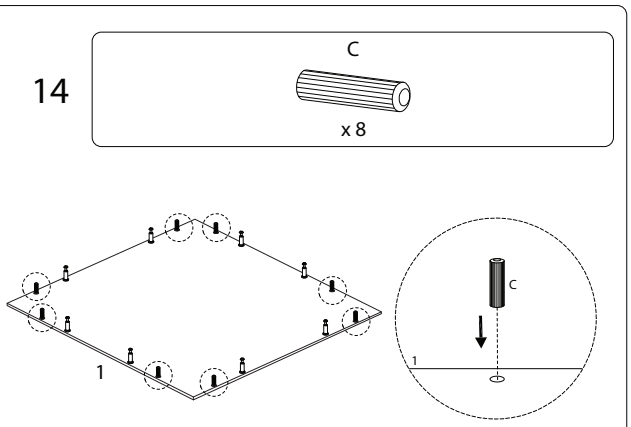






15

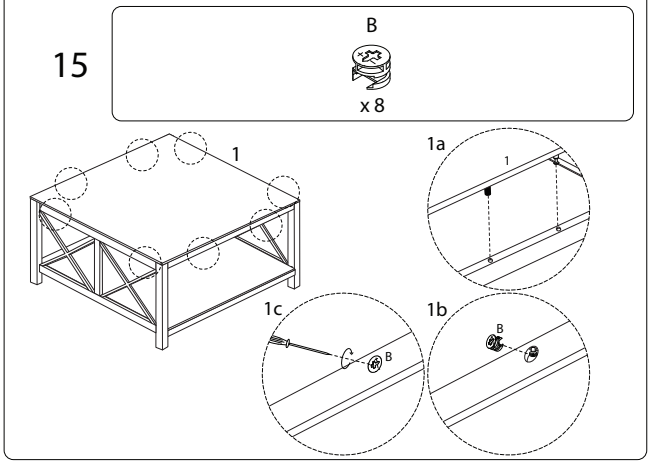


16

