

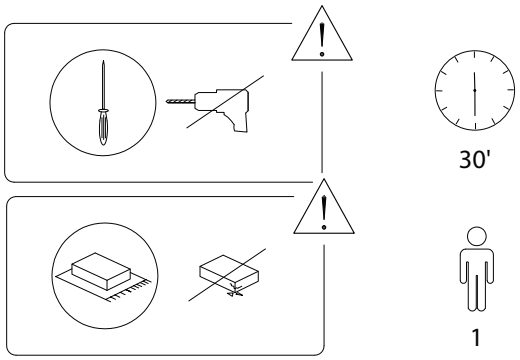
30'
1

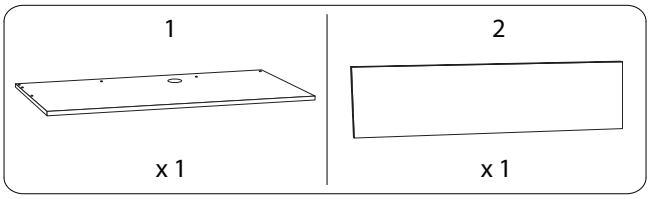
1
x 1
2
x 1

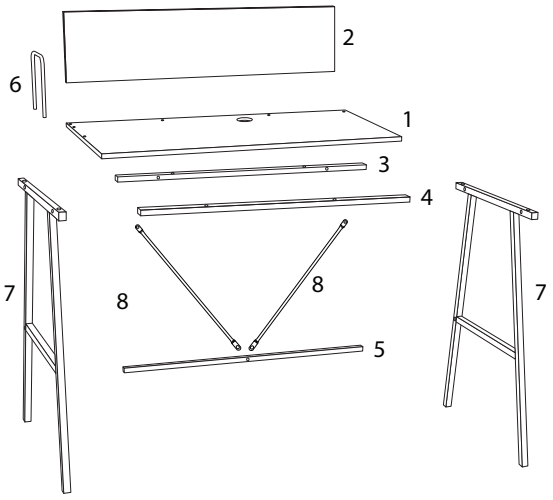
2
6
1
3
4
7
8
8
7
5

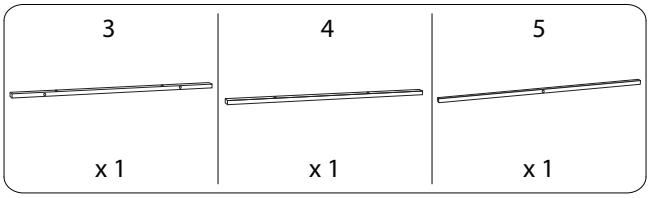
3
x 1
4
x 1
5
x 1

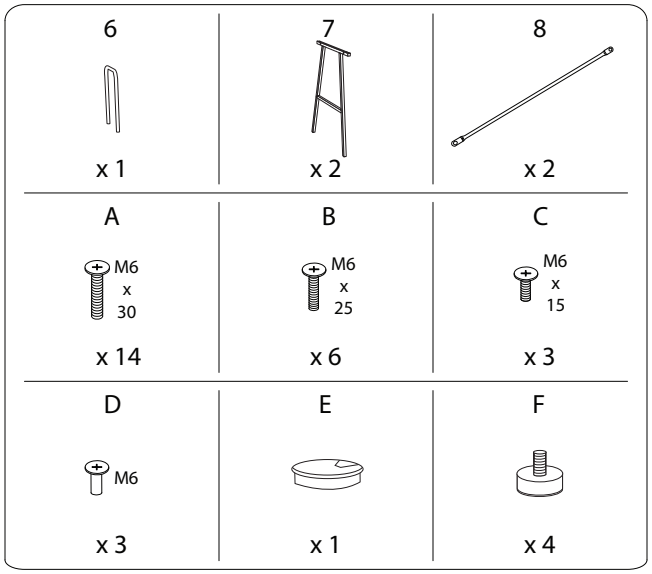
6
x 1
7
x 2
8
x 2
A
M6 x 30
x 14
B
M6 x 25
x 6
C
M6 x 15
x 3
D
M6
x 3
E
x 1
F
x 4

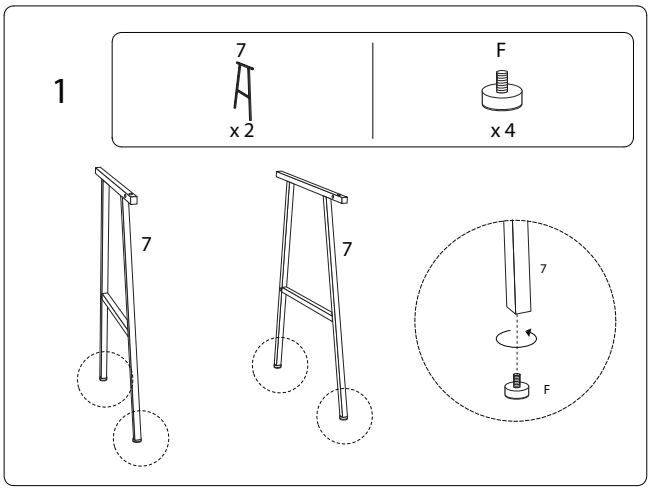
1
7
x 2
F
x 4
7
7
7
F

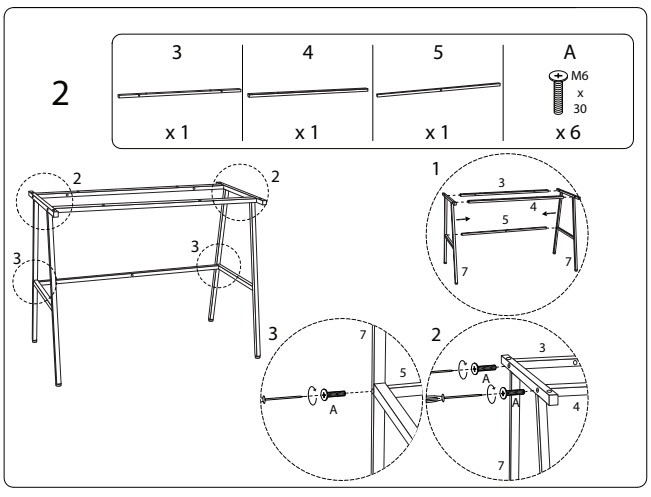
2
3
x 1
4
x 1
5
x 1
A
M6 x 30
x 6
2
2
3
3
1
3
4
5
7
7
3
7
5
A
2
3
A
A
4
7

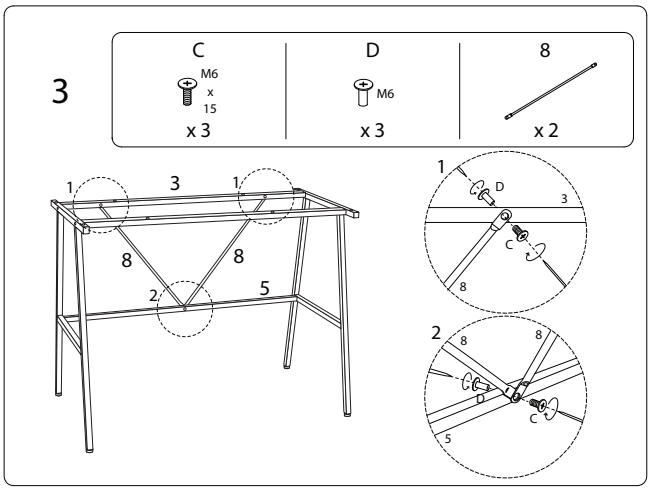

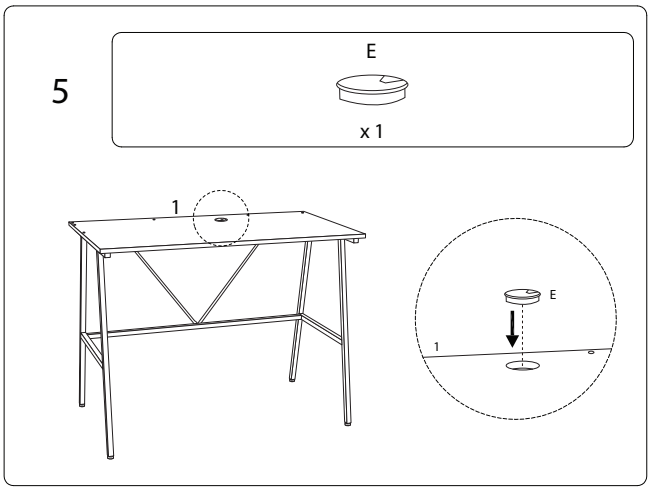

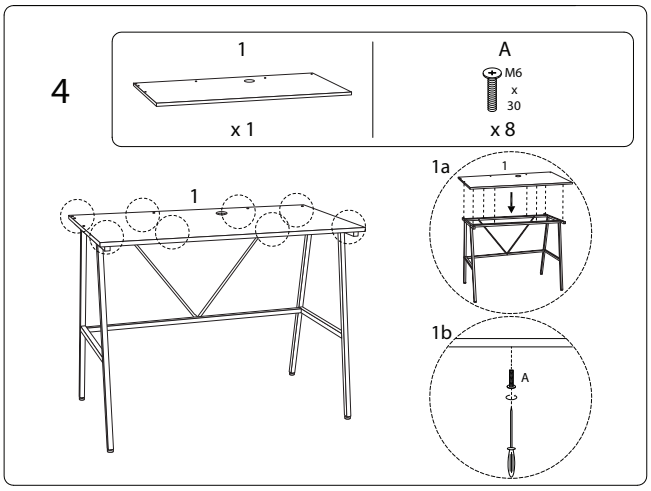

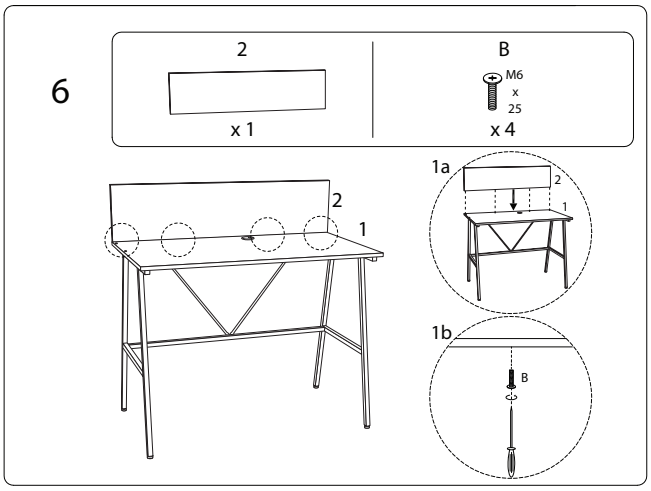

5/7

884/HASTINGS/280520/

6/7

884/HASTINGS/280520/

