LEVIN

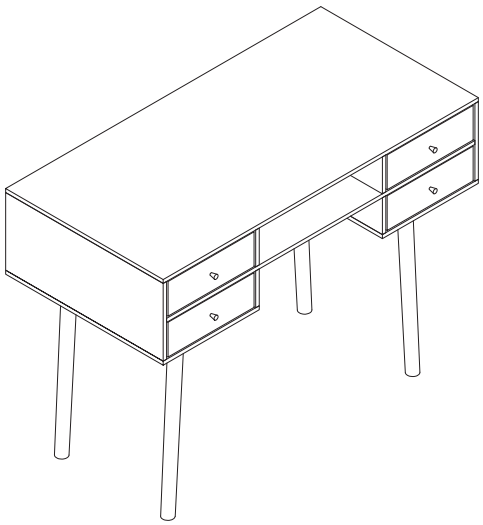

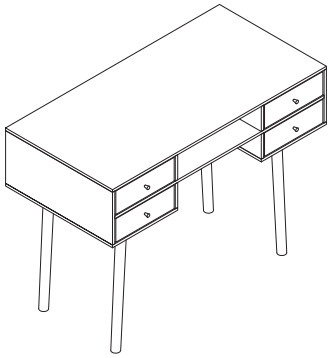

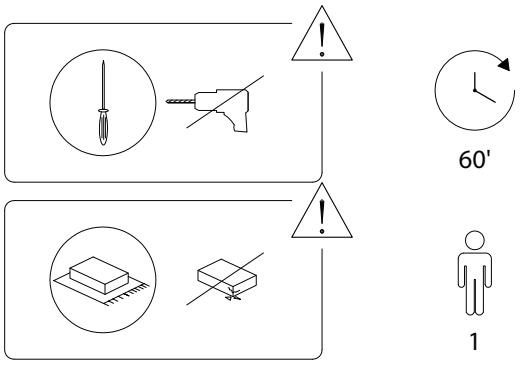

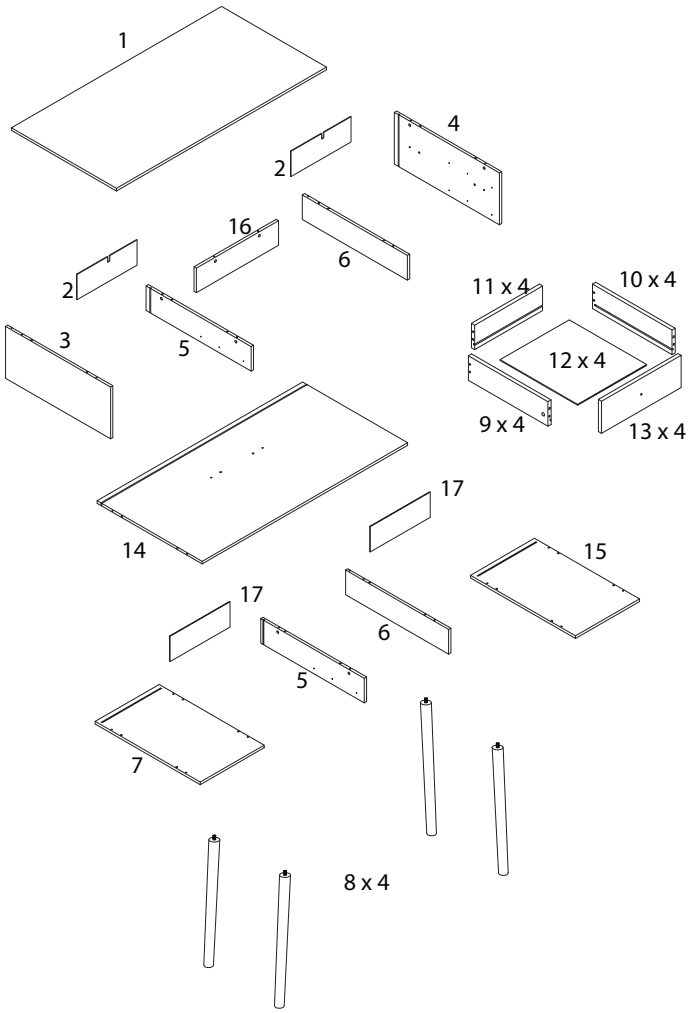

1 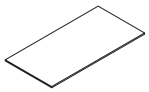 x 1	2  x 2	3 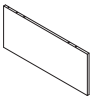 x 1
4 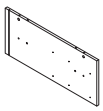 x 1	5 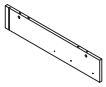 x 2	6 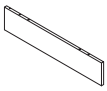 x 2
7 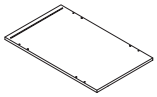 x 1	8  x 4	9  x 4
10  x 4	11  x 4	12 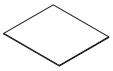 x 4	13  x 4
14 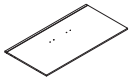 x 1	15 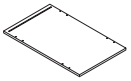 x 1	16  x 1	17  x 2

A	B	C
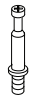		
x 26	x 26	x 40
D	**E**	**F**
 M3 x 12	 M4 x 35	 M4 x 14
x 48	x 32	x 20
G	**H**	**I**
	 M4 x 25	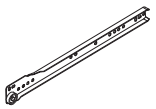
x 4	x 4	x 4
J	**K**	**L**
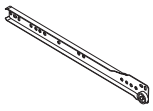	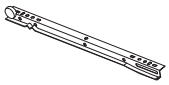	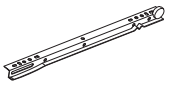
x 4	x 4	x 4
M	**N**	**O**	**P**
	 M4 x 12		
x 4	x 2	x 2	x 2

Beliani
1273/LEVIN/210225/

1 x 4

9	10	11	E
x 1	x 1	x 1	M4 x 35 x 4

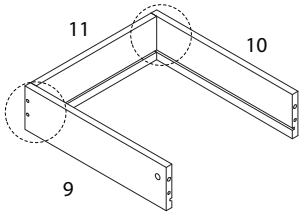

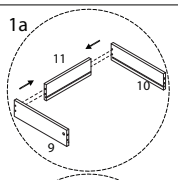

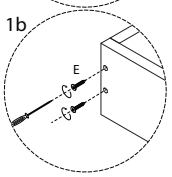

2 x 4

12
x 1

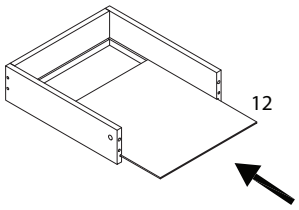

Beliani
1273/LEVIN/210225/

3 x 4

13	A	C
x 1	x 2	x 2

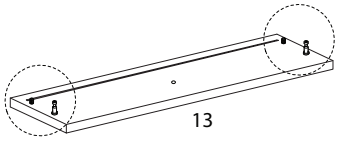

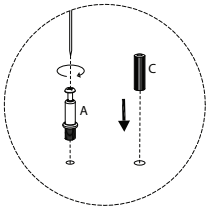

5 x 4

H	M
M4 x 25 x 1	x 1

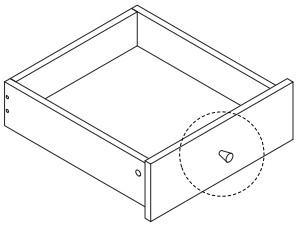

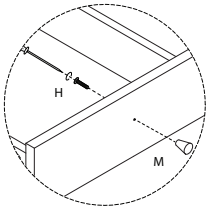

4 x 4

B
x 2

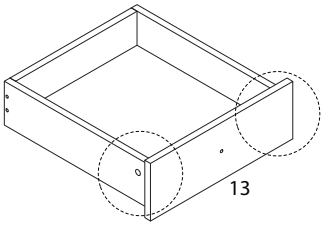

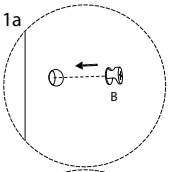

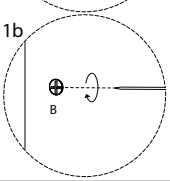

Beliani
1273/LEVIN/210225/

6 x 4

D	K	L
M3 x 12 x 6	x 1	x 1

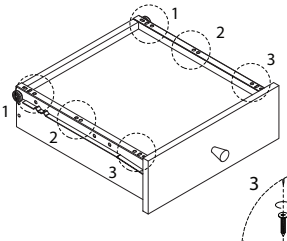

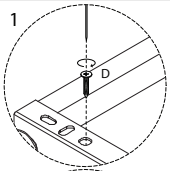

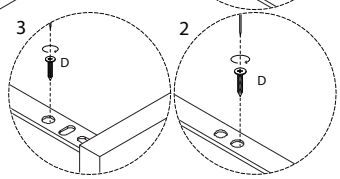

Beliani
1273/LEVIN/210225/

7

3	D	I
x 1	x 6	x 2

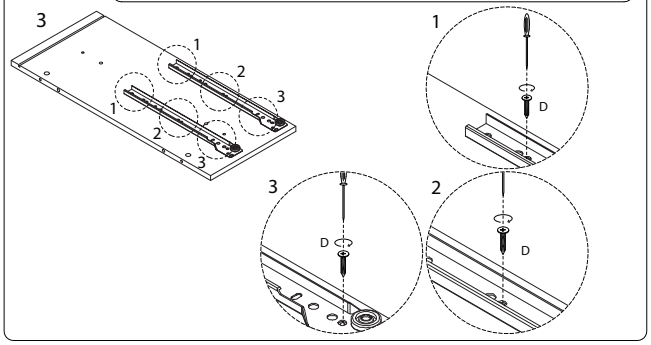

9 x 2

5	D	I
x 1	x 3	x 1

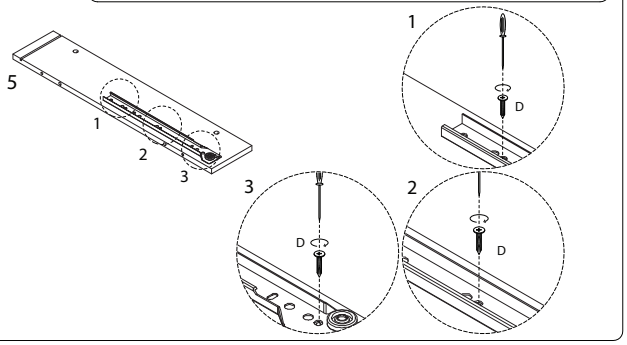

8

4	D	J
x 1	x 6	x 2

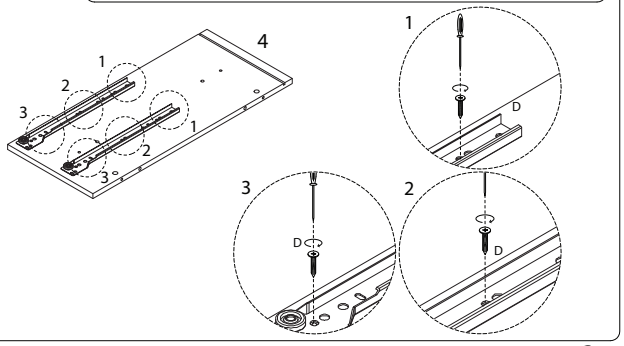

Beliani
1273/LEVIN/210225/

10 x 2

6	D	J
x 1	x 3	x 1

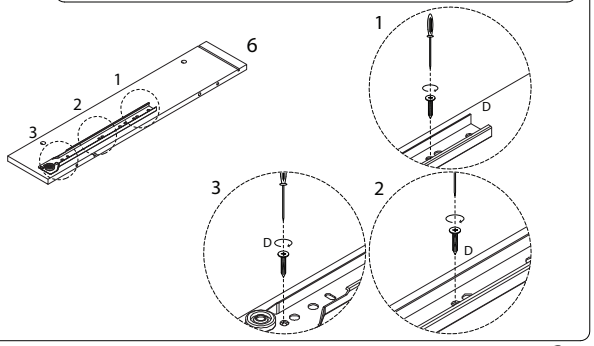

Beliani
1273/LEVIN/210225/

11

1	A	C
x 1	x 6	x 6

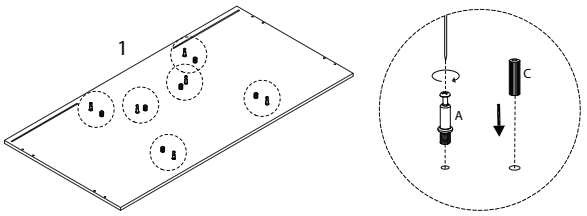

13

B
x 2

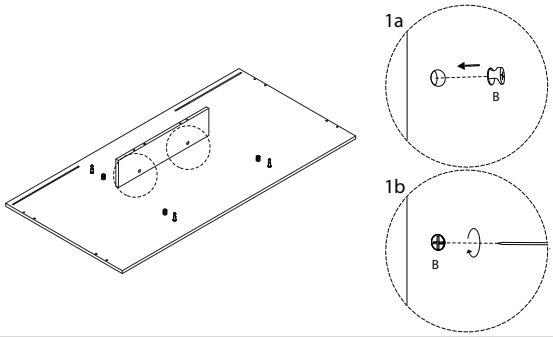

12

16
x 1

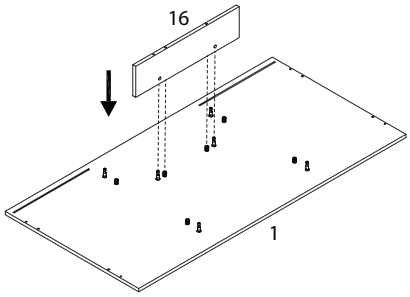

Beliani
1273/LEVIN/210225/

14

N	P
x 2	x 2

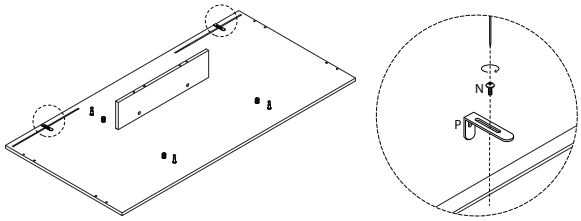

Beliani
1273/LEVIN/210225/

15

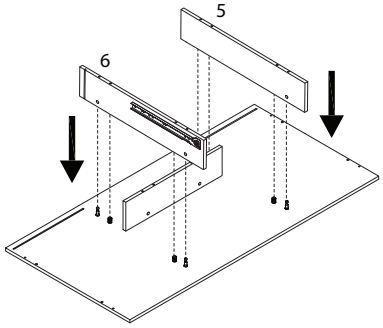

16

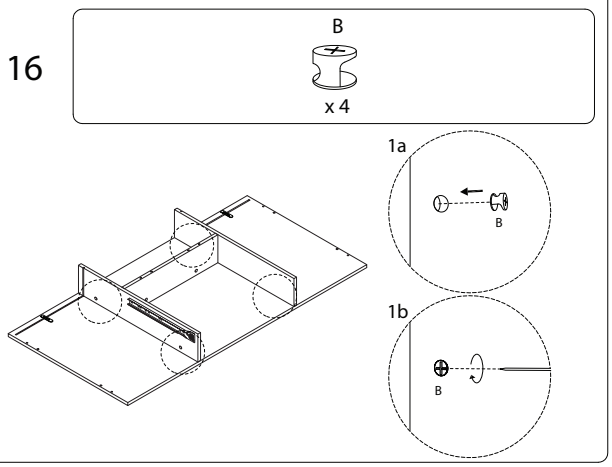

Beliani
1273/LEVIN/210225/

17

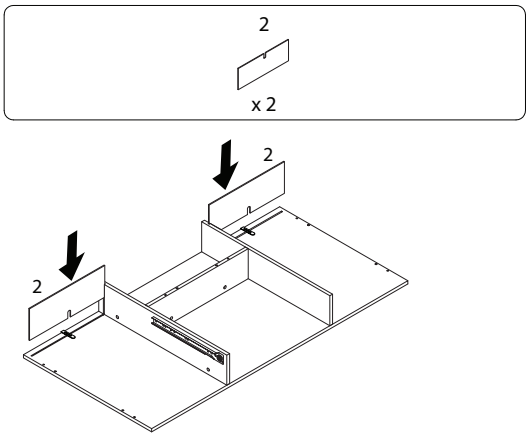

18

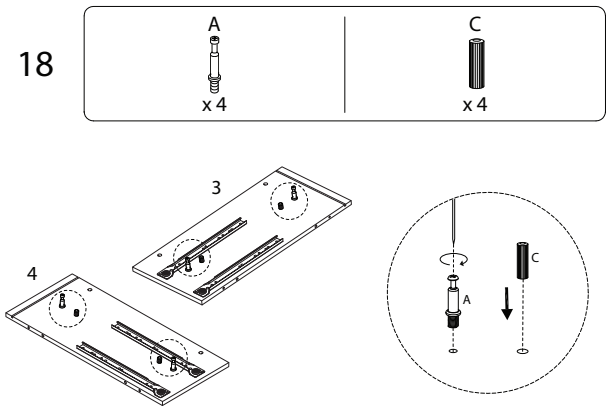

Beliani
1273/LEVIN/210225/

19

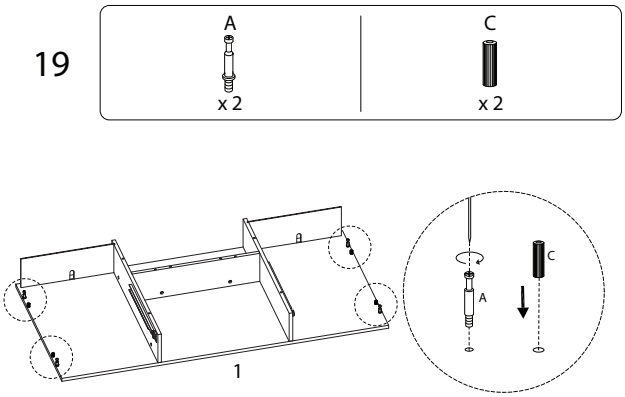

20

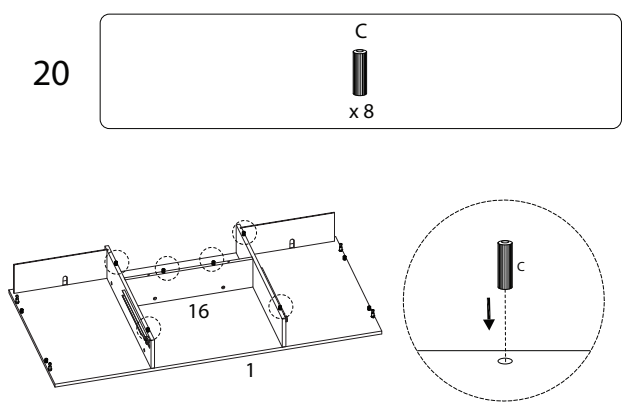

Beliani
1273/LEVIN/210225/

21

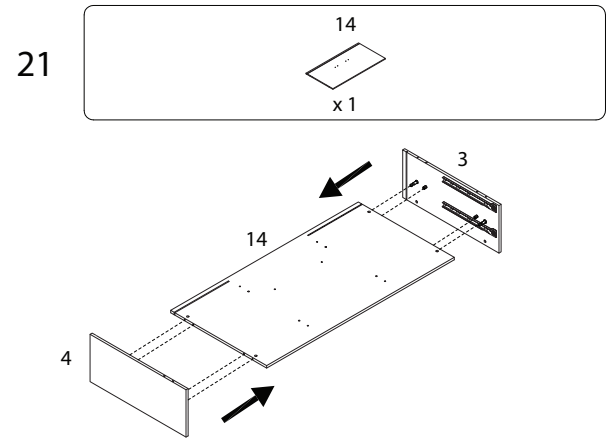

22

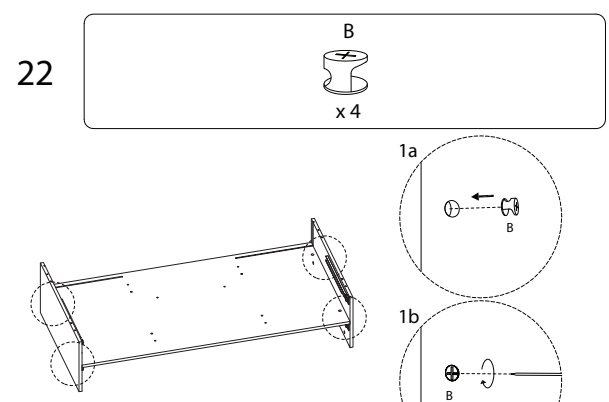

Beliani
1273/LEVIN/210225/

23

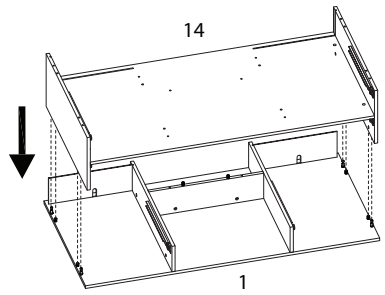

24

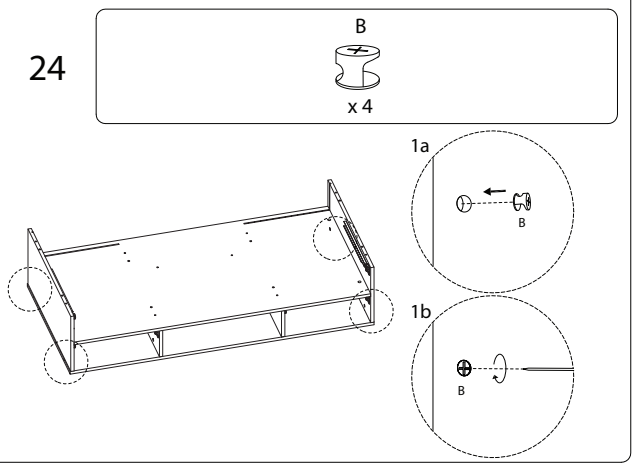

Beliani
1273/LEVIN/210225/

25

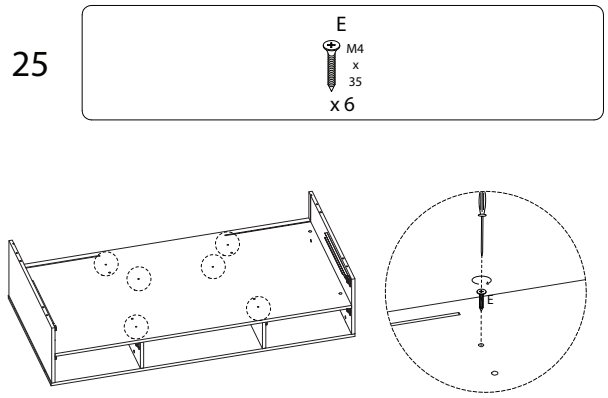

26

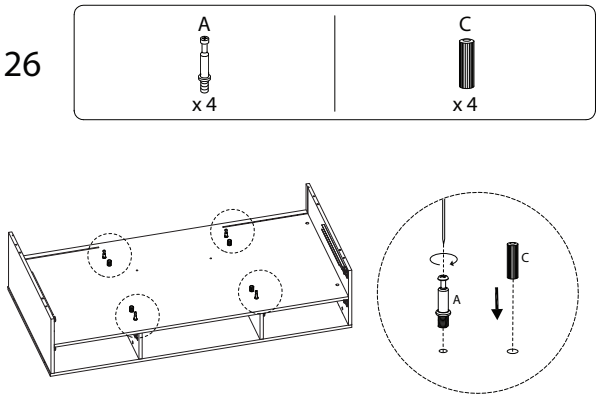

Beliani
1273/LEVIN/210225/

27

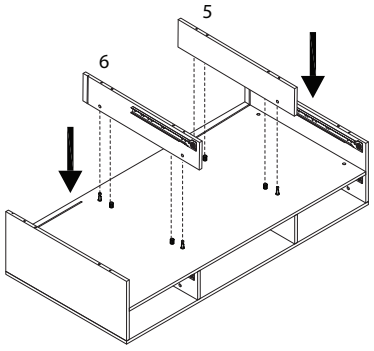

29

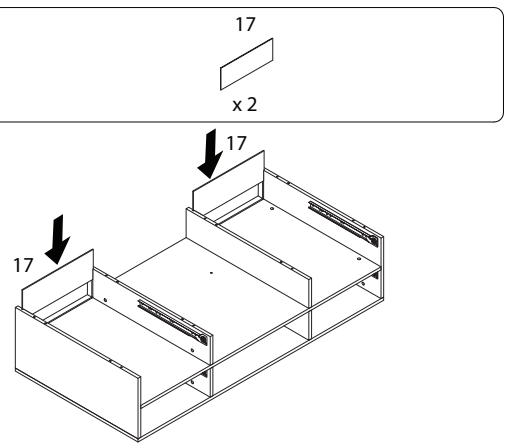

28

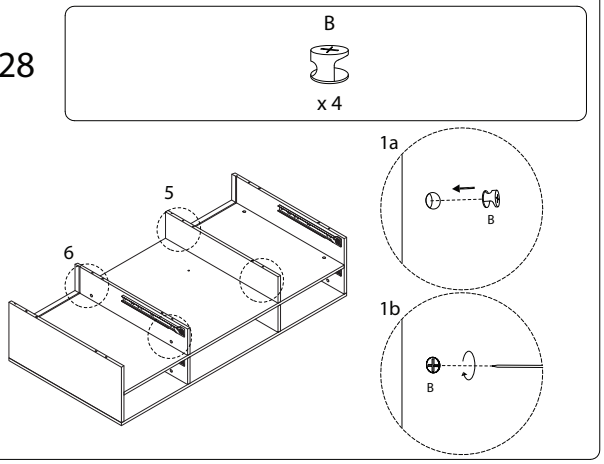

Beliani
1273/LEVIN/210225/

30

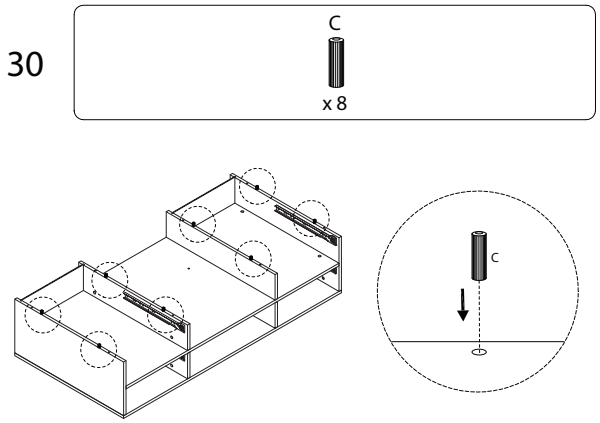

Beliani
1273/LEVIN/210225/

31

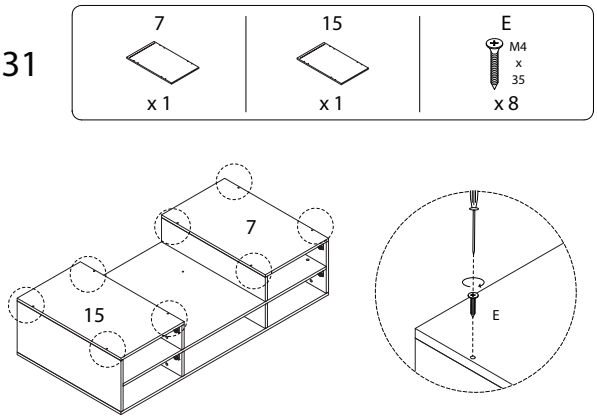

33

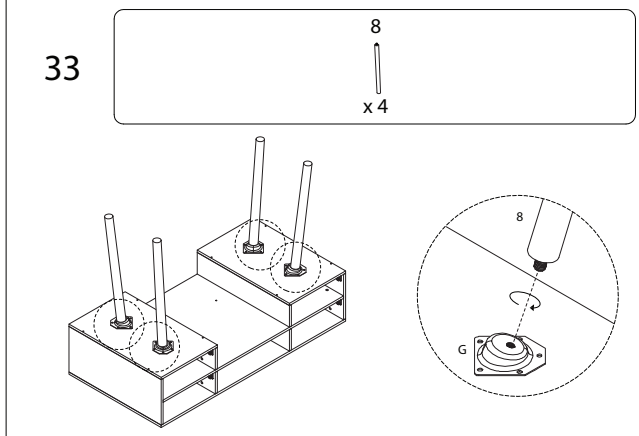

32

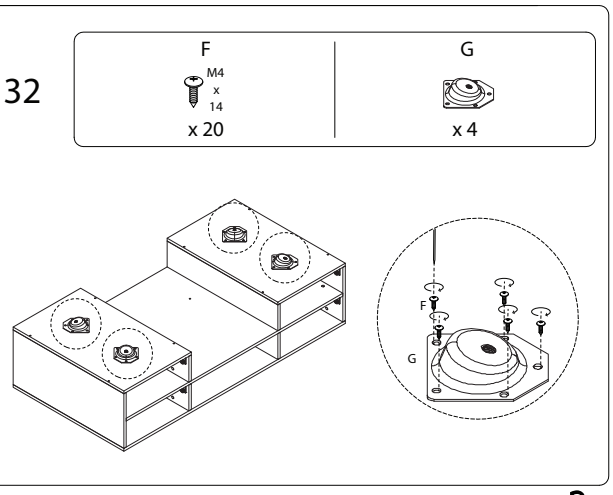

34

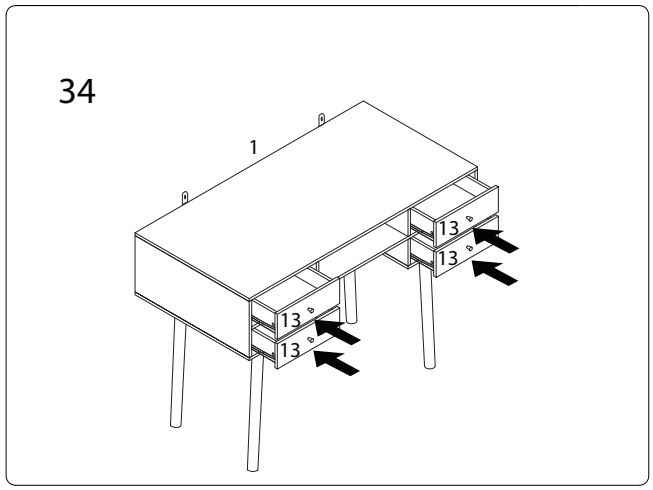

Beliani
1273/LEVIN/210225/

Beliani
1273/LEVIN/210225/

35

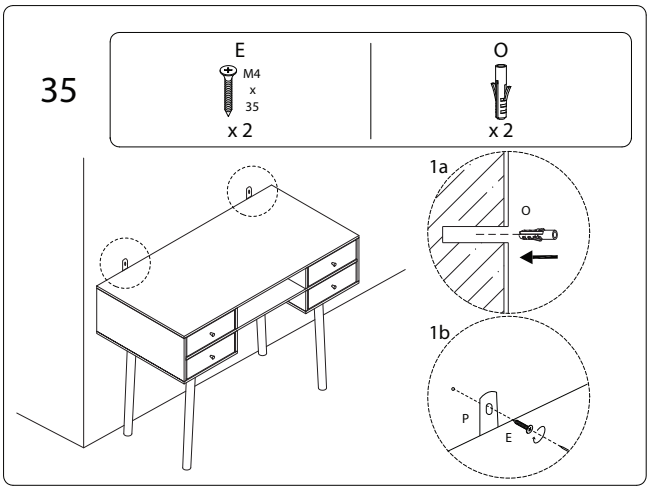

Schweiz, Suisse, Svizzera
mail@beliani.ch
tel. +41 43 508 22 33

Deutschland
mail@beliani.de
tel. +49 221 6778 9927

Österreich
mail@beliani.at
tel. +43 1 375 00 57

United Kingdom
mail@beliani.co.uk
tel. +44 20 3318 8222

Polska
mail@beliani.pl
tel. +48 91 350 83 60

Nederland
mail@beliani.nl
tel. +31 38 744 0103

France
mail@beliani.fr
tel. +33 1 87 39 86 15

Italia
mail@beliani.it
tel. +39 06 56548602

España
mail@beliani.es
tel. +34 932 714 061

Portugal
mail@beliani.pt
tel. +351 22 145 07 45

Norge
mail@beliani.no
tel. +47 21 56 99 75

Sverige
mail@beliani.se
tel. +46 8 446 891 58

Suomi
mail@beliani.fi
tel. +358 9 4245 0464

Danmark
mail@beliani.dk
tel. +45 89 88 10 86

Česká Republika
mail@beliani.cz
tel. +420 228881514

Slovensko
mail@beliani.sk
tel. +421 232784612

Magyarország
mail@beliani.hu
tel. +36 (1) 211 4034

România
mail@beliani.ro
tel. +40 316 300 677

België, Belgique
mail@beliani.be
tel. +32 28085614

Representative in EU:

Beliani Kundendienst GmbH
Leverkusener Str. 31
16303 Schwedt
Germany

Beliani
1273/LEVIN/210225/