



10'



1

1/3

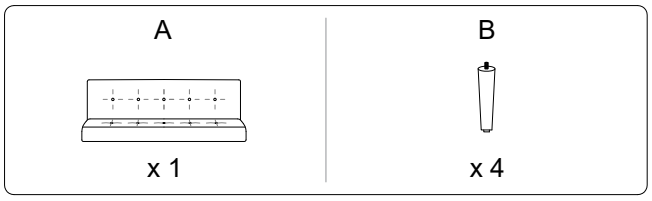

A

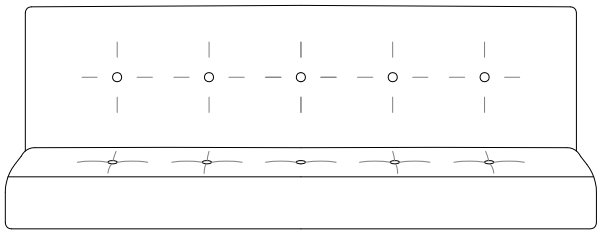

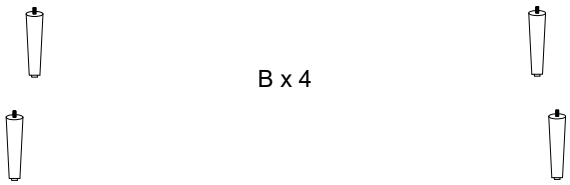

B x 4

2/3

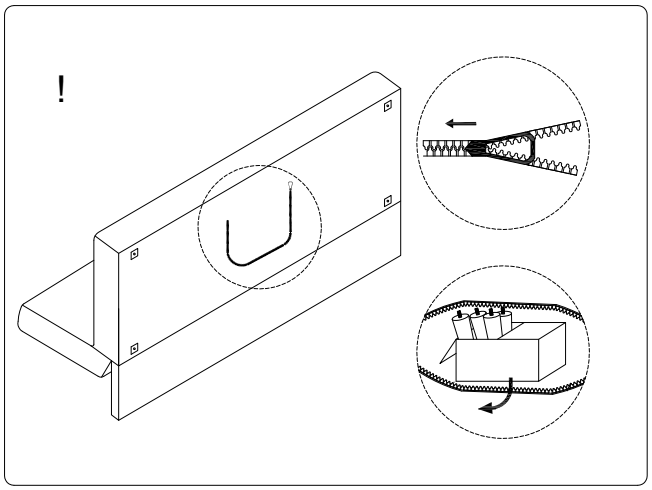

1

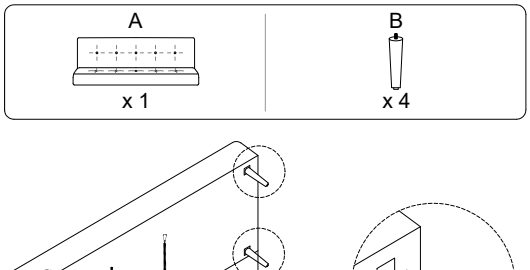

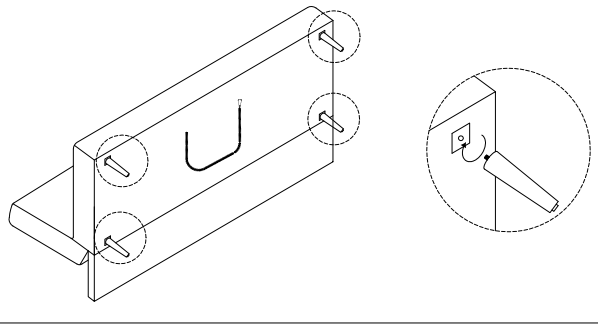

3/3