BANFF

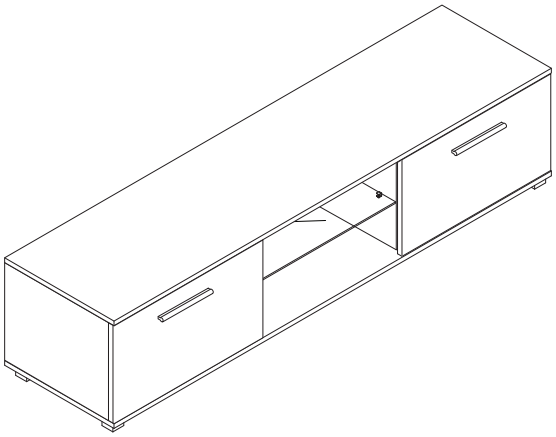

1/13

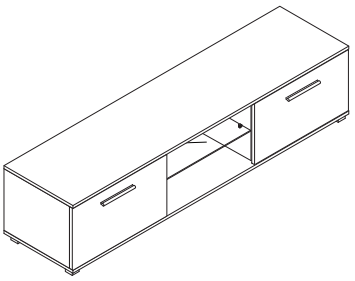

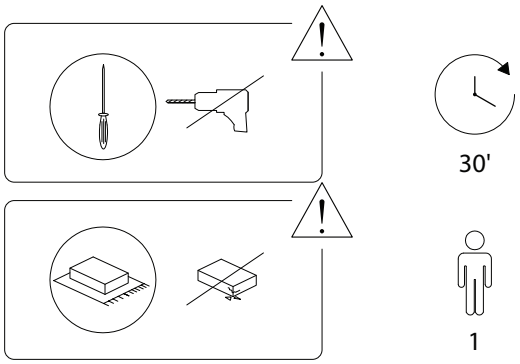

2/13

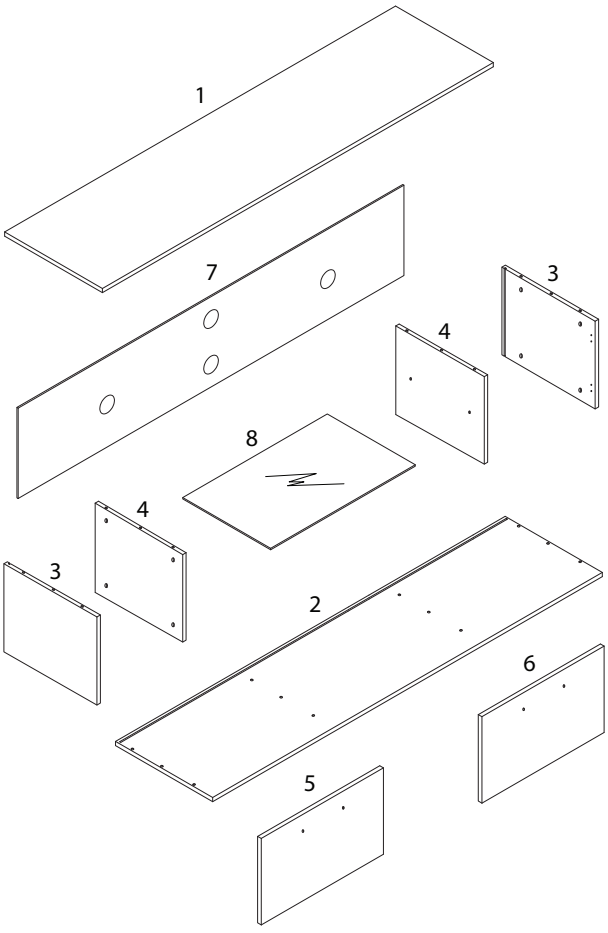

3/13

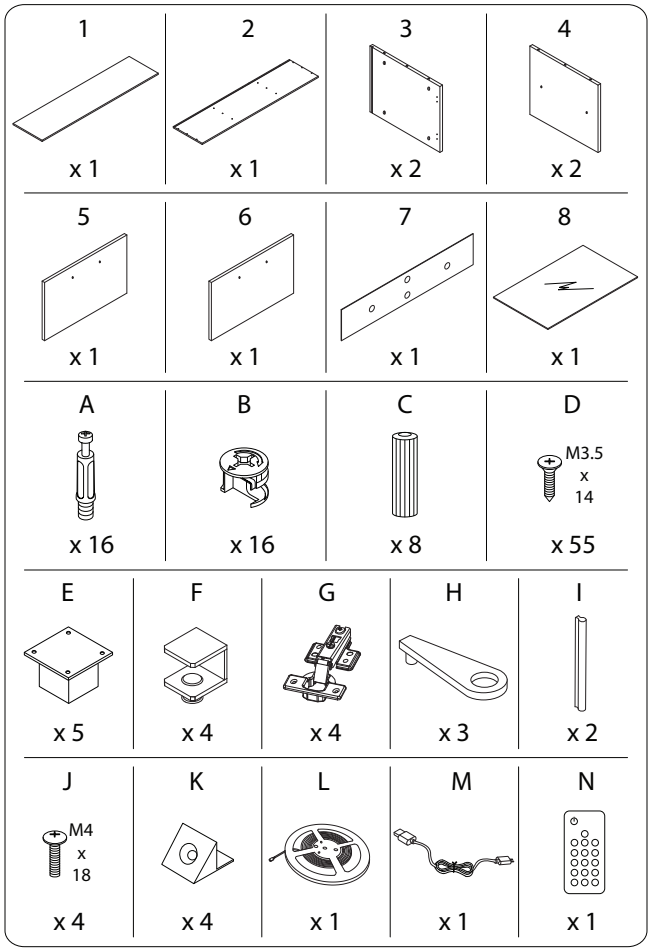

4/13

2303/BANFF/270126/

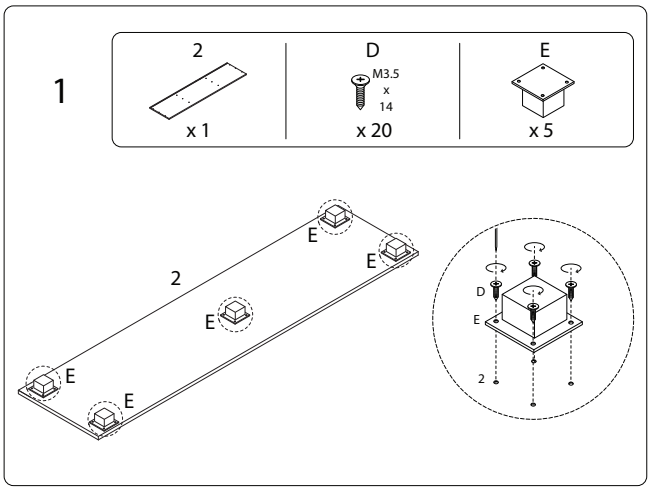
1
2
x 1
D
M3.5
x
14
x 20
E
x 5
2
E
E
E
E
E
D
E
2

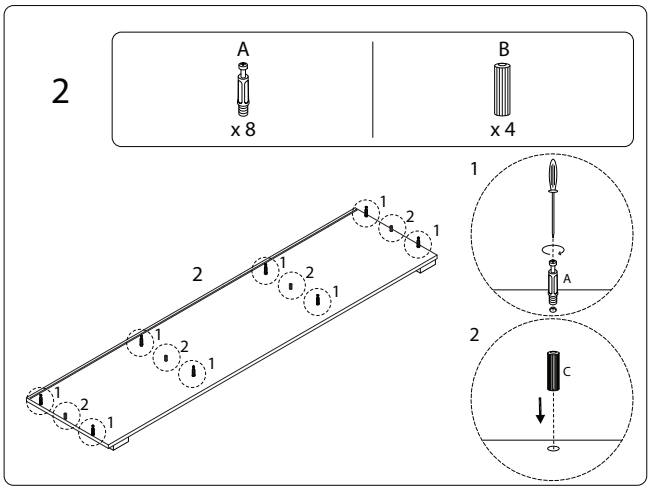
2
A
x 8
B
x 4
2
1
2
1
1
2
1
1
2
1
1
2
1
1
A
2
C

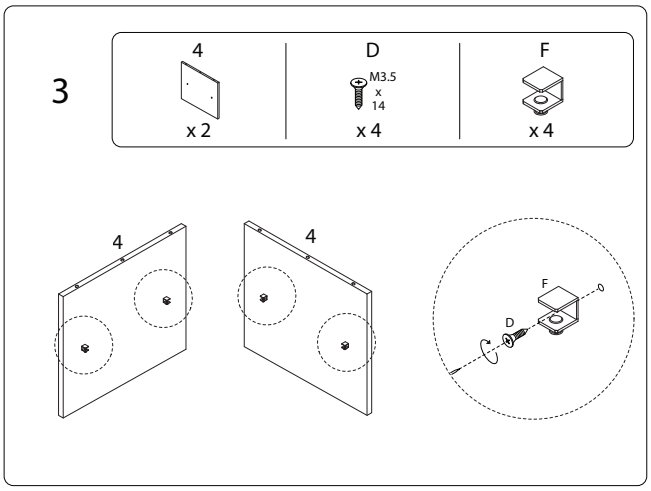
3
4
x 2
D
M3.5
x
14
x 4
F
x 4
4
4
F
D

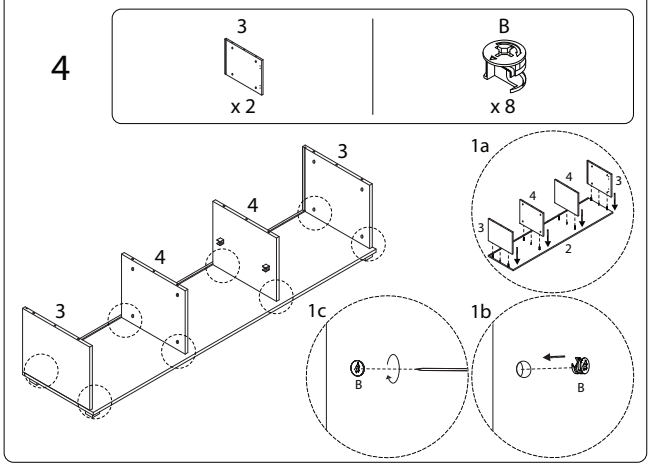
4
3
x 2
B
x 8
3
4
4
3
1a
4
4
3
3
2
1c
B
1b
B

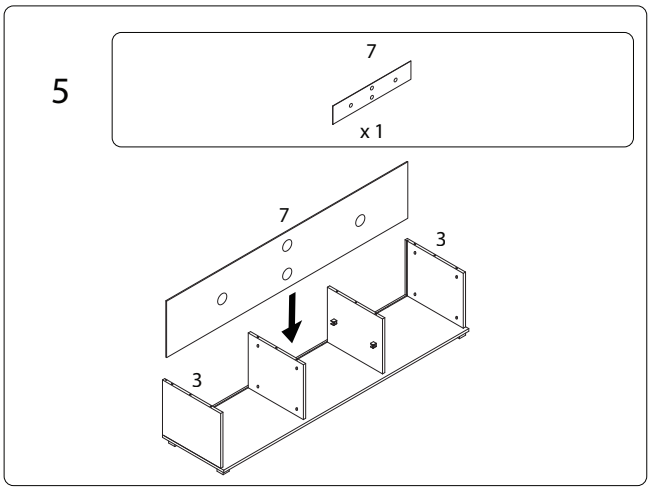
5
7
x 1
7
3
3

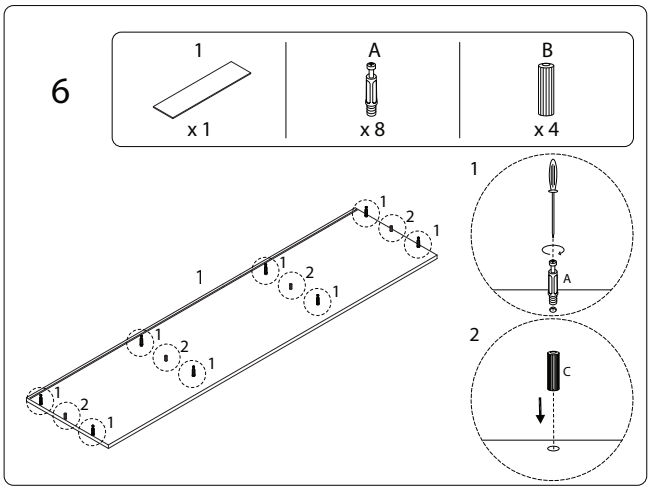
6
1
x 1
A
x 8
B
x 4
1
1
2
1
1
2
1
1
2
1
1
2
1
1
A
2
C

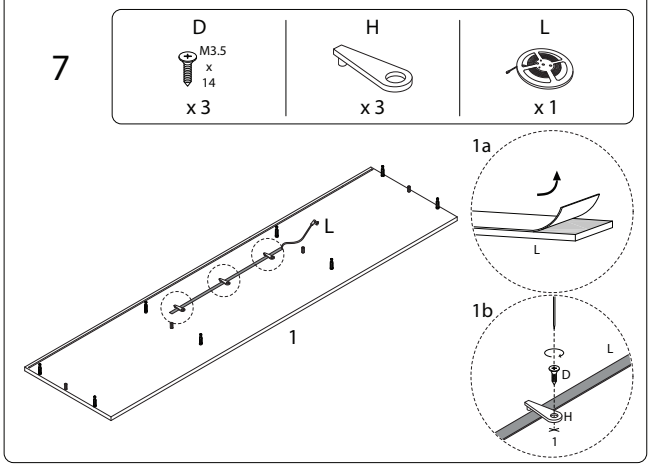
7
D
M3.5
x
14
x 3
H
x 3
L
x 1
L
1
1a
L
1b
L
D
H
1

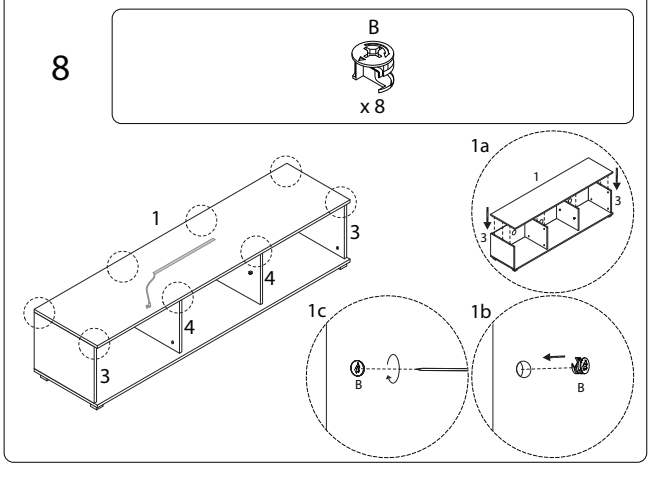
8
B
x 8
1
3
4
4
3
1a
1
3
3
1c
B
1b
B

9

M

x 1

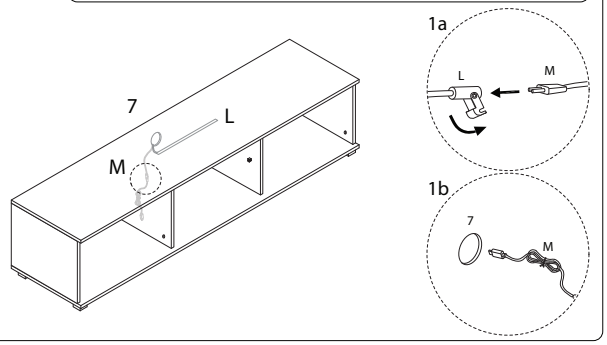

10

8

x 1

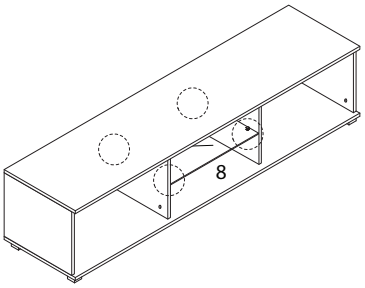

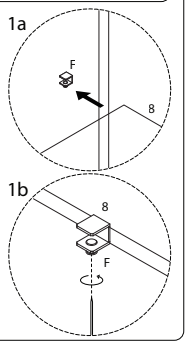

11

5

x 1

6

x 1

I

x 2

J

M4 x 18

x 4

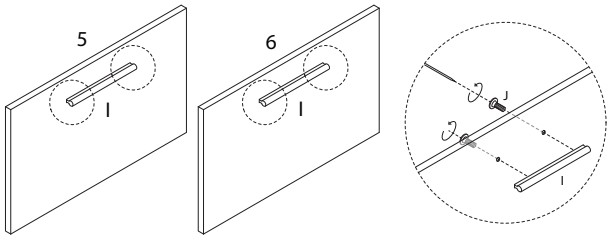

12

D

M3.5 x 14

x 8

G

x 4

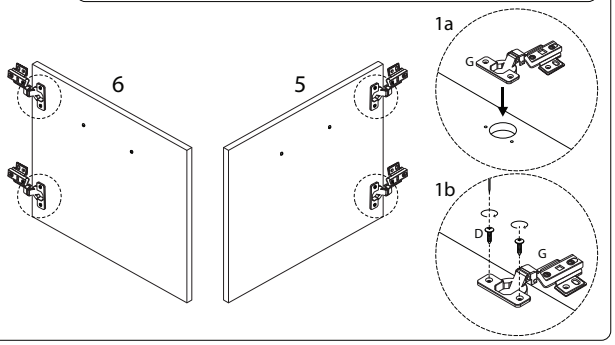

13

D

M3.5 x 14

x 16

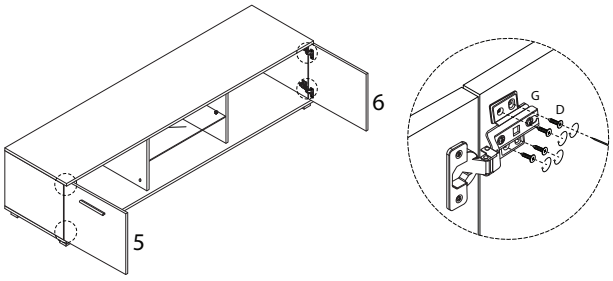

14

D

M3.5 x 14

x 4

K

x 4

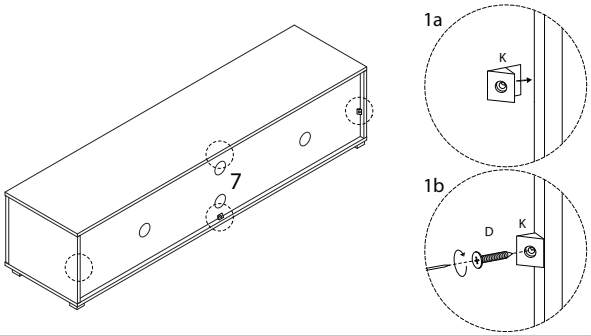

!

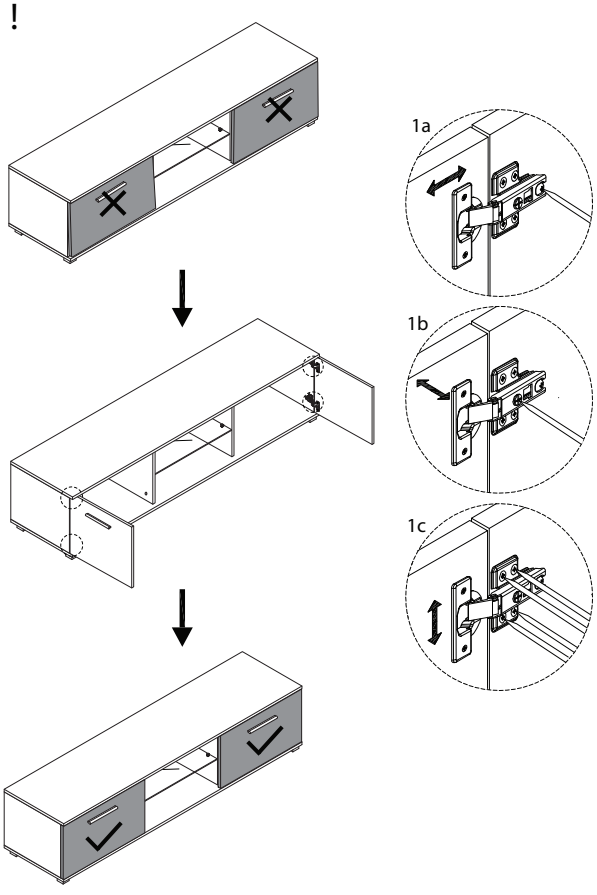

!

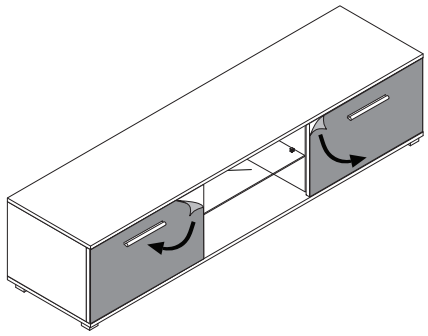

2303/BANFF/270126/