LILLEBONNE

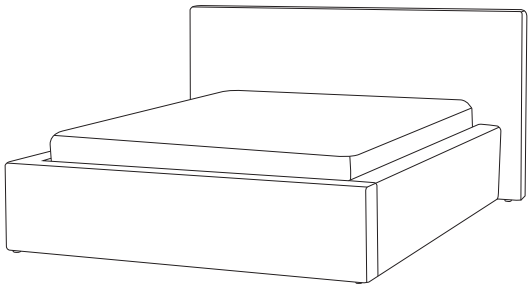

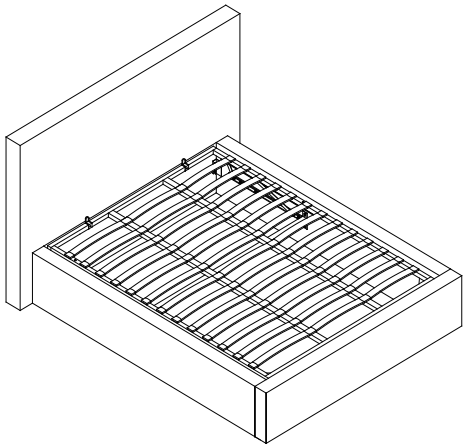

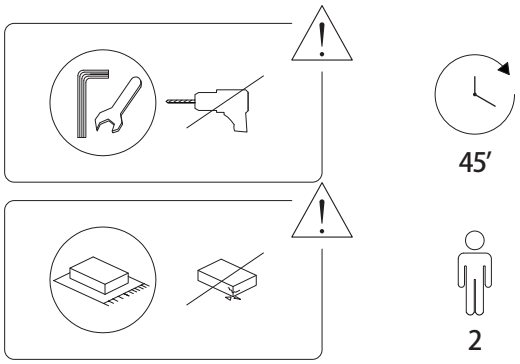
45'
2

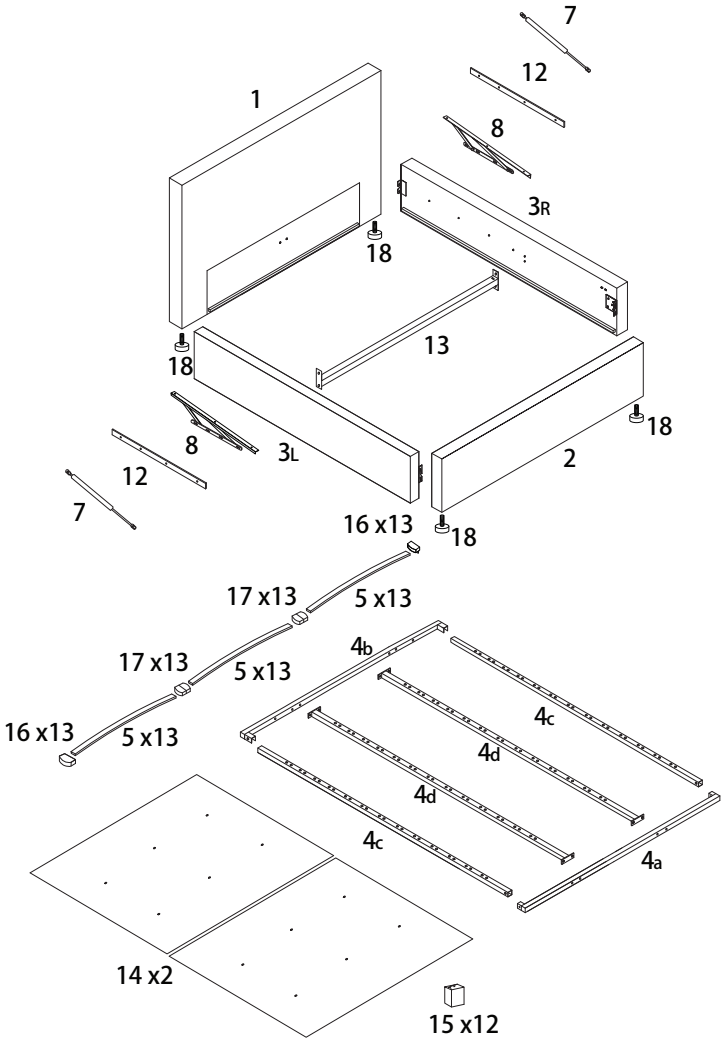
7
12
1
8
3R
18
18
13
18
8
3L
2
12
7
16 x13
18
17 x13
5 x13
17 x13
5 x13
4b
16 x13
5 x13
4c
4d
4d
4c
4a
14 x2
15 x12

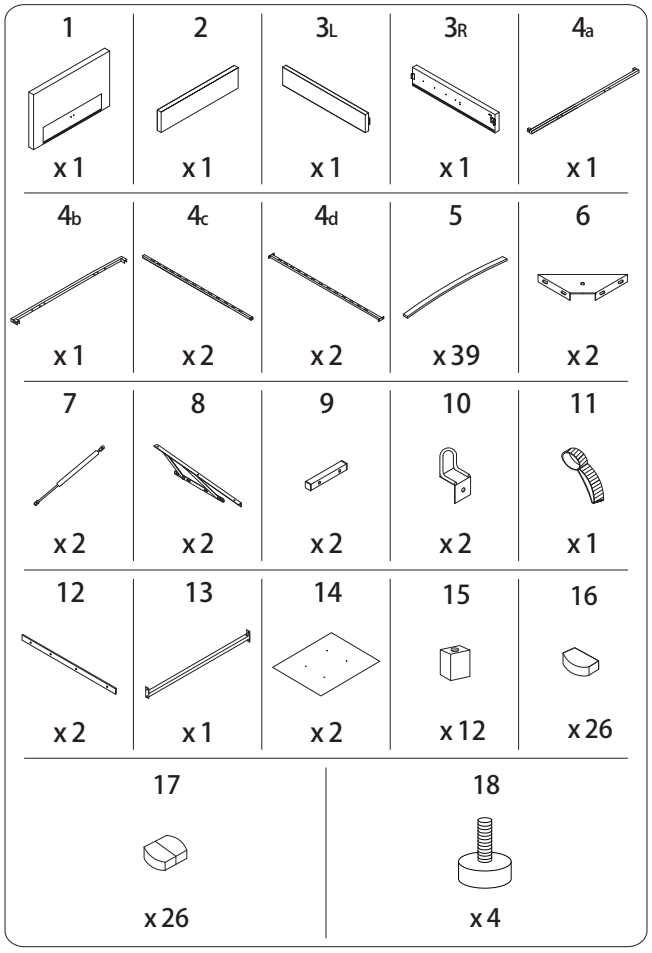
1 x 1
2 x 1
3L x 1
3R x 1
4a x 1
4b x 1
4c x 2
4d x 2
5 x 39
6 x 2
7 x 2
8 x 2
9 x 2
10 x 2
11 x 1
12 x 2
13 x 1
14 x 2
15 x 12
16 x 26
17 x 26
18 x 4

A	B	C
M8 x 50	M8 x 30	M6 x 25
x 18	x 8	x 24
D	**E**	**F**
M6 x 40	M6 x 50	
x 8	x 4	x 18
G	**H**	**I**
	∅19	∅16
x 26	x 26	x 36
J	**K**	**L**
M8	M6	
x 1	x 1	x 1
	M	
	x 6	

1

1	2	18
x 1	x 1	x 4

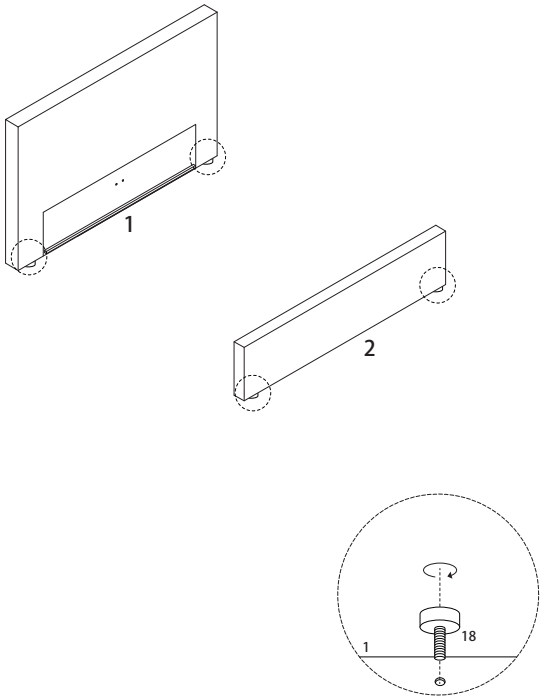

2

3L	3R	B	G	H	J
		M8 x 30		∅19	M8
x 1	x 1	x 8	x 8	x 8	x 1

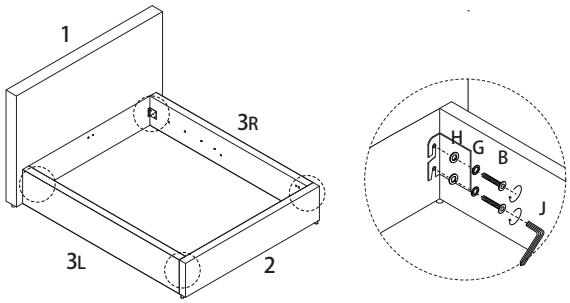

3

14	15	C	I	K
		M6 x 25	∅16	M6
x 2	x 12	x 12	x 12	x 1

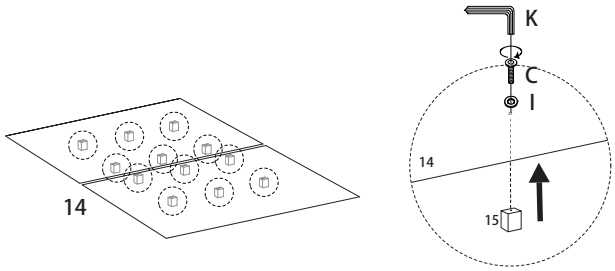

4

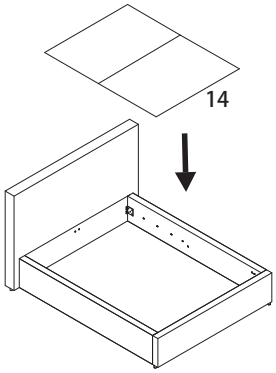

5

9	E	I	K
	M6 x 50	∅16	M6
x 2	x 4	x 4	x 1

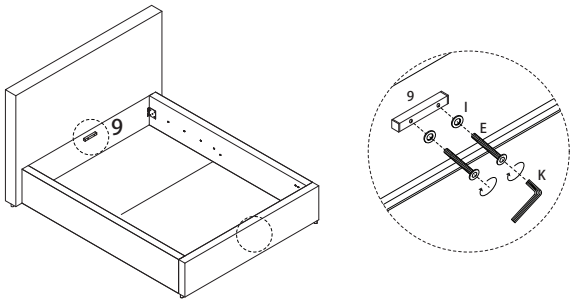

6

13	C	I	K
x 1	M6 x 25 x 4	⌀16 x 4	M6 x 1

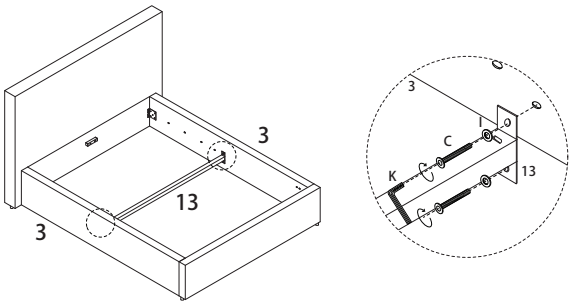

7

6	C	I	K
x 2	M6 x 25 x 8	⌀16 x 8	M6 x 1

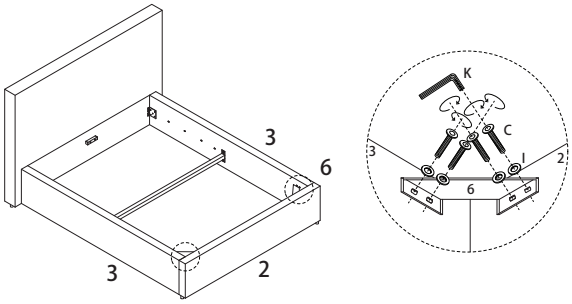

8

8	12	D	I	K
x 2	x 2	M6 x 40 x 8	⌀16 x 8	M6 x 1

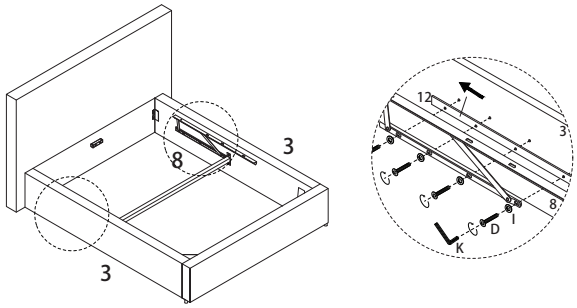

!

4a	4b	4c	4d
x 1	x 1	x 2	x 2

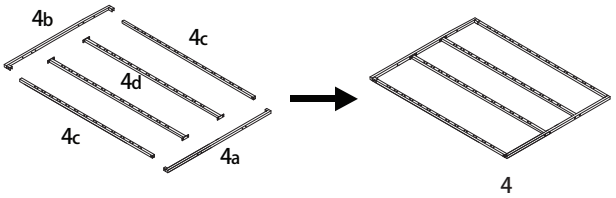

9

4a	11
x 1	x 1

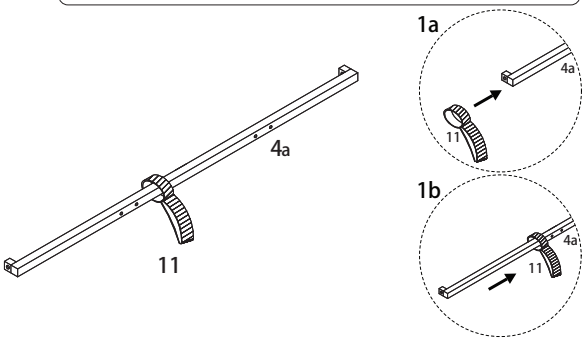

10

4b	10	A	F	G	H	J	L
x 1	x 2	M8 x 50 x 2	x 2	x 2	⌀19 x 2	M8 x 1	x 1

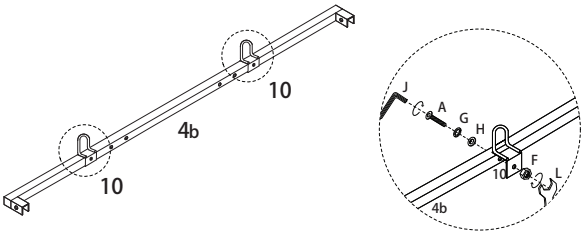

11

A	F	G	H	J	L
M8 x 50 x 12	x 12	x 12	⌀19 x 12	M8 x 1	x 1

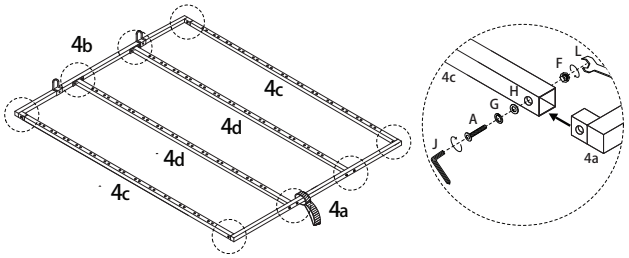

12

A	F	G	H	J	L
M8 x 50 x 4	x 4	x 4	⌀19 x 4	M8 x 1	x 1

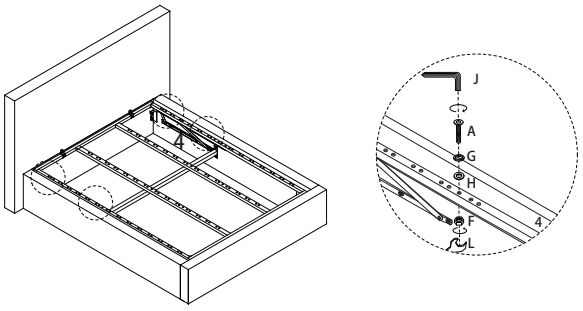

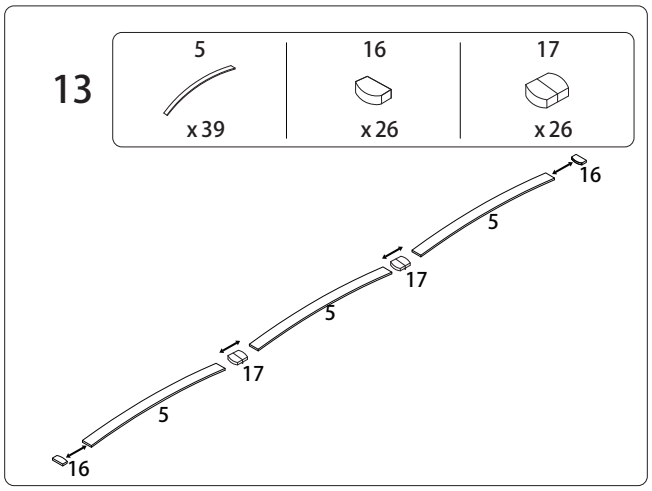

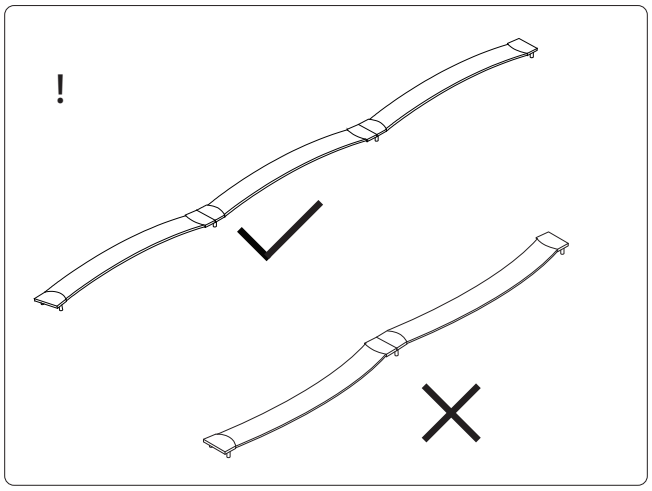

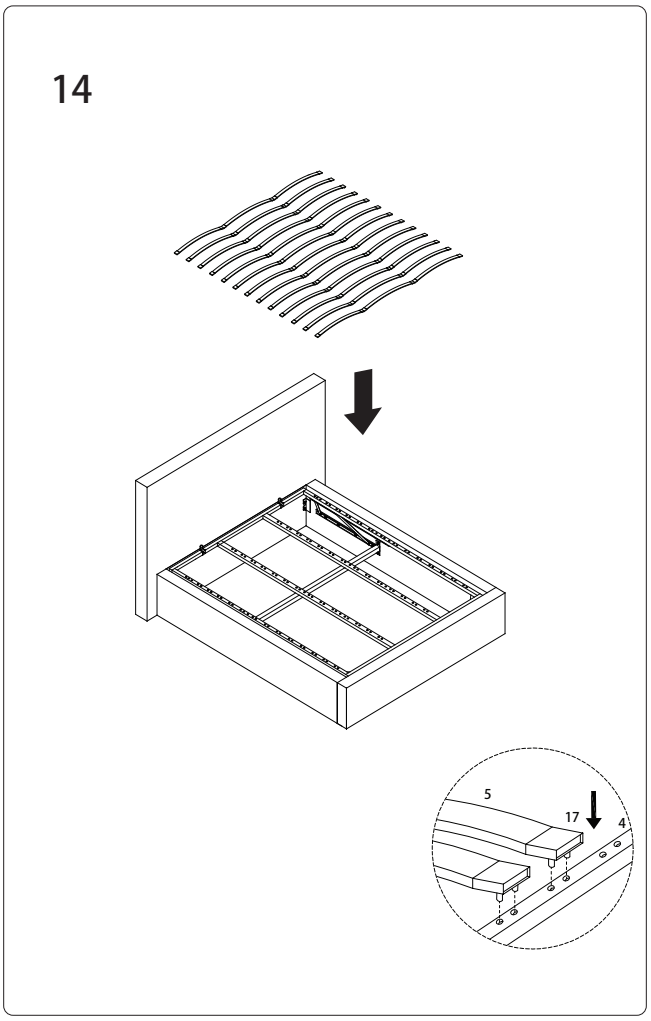

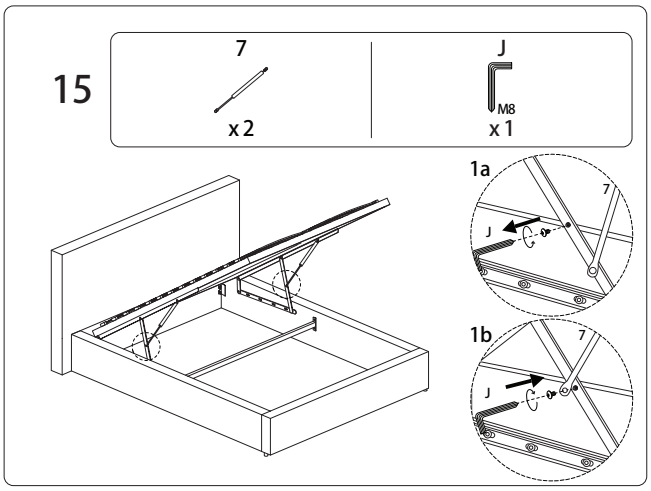

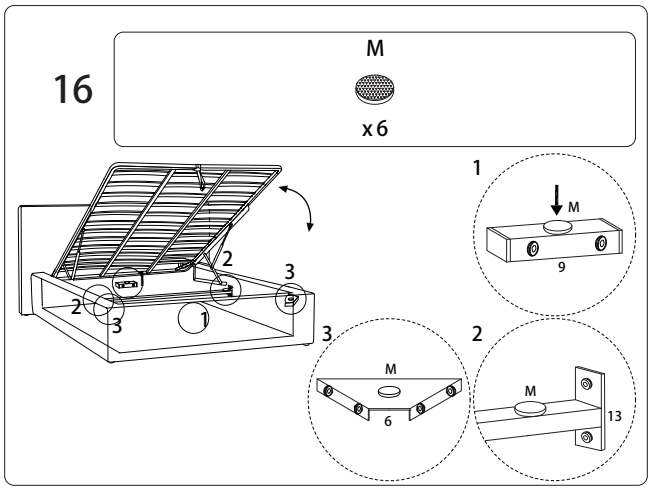

Schweiz, Suisse, Svizzera
mail@beliani.ch
tel. +41 43 508 22 33

Deutschland
mail@beliani.de
tel. +49 221 6778 9927

Österreich
mail@beliani.at
tel. +43 1 375 00 57

United Kingdom
mail@beliani.co.uk
tel. +44 20 3318 8222

Polska
mail@beliani.pl
tel. +48 91 350 83 60

Nederland
mail@beliani.nl
tel. +31 38 744 0103

France
mail@beliani.fr
tel. +33 1 84 79 84 99

Italia
mail@beliani.it
tel. +39 06 56548602

España
mail@beliani.es
tel. +34 932 714 061

Portugal
mail@beliani.pt
tel. +351 22 145 07 45

Norge
mail@beliani.no
tel. +47 21 56 99 75

Sverige
mail@beliani.se
tel. +46 8 446 891 58

Suomi
mail@beliani.fi
tel. +358 9 4245 0464

Danmark
mail@beliani.dk
tel. +45 89 88 10 86

Česká Republika
mail@beliani.cz
tel. +420 228881514

Slovensko
mail@beliani.sk
tel. +421 232784612

Magyarország
mail@beliani.hu
tel. +36 (1) 211 4034

România
mail@beliani.ro
tel. +40 316 300 677

België, Belgique
mail@beliani.be
tel. +32 28085614

Representative in EU:

Beliani Kundendienst GmbH
Leverkusener Str. 31
16303 Schwedt
Germany

RECICLA RECICLA COMPOSTA RECICLA

LE TRI + FACILE + + BAC DE TRI

LE TRI + FACILE TRI VERRE

20 PAP 04 PE-LD 06 PS