BONIFACIO

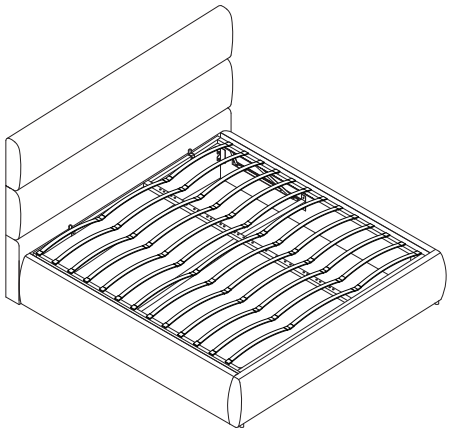

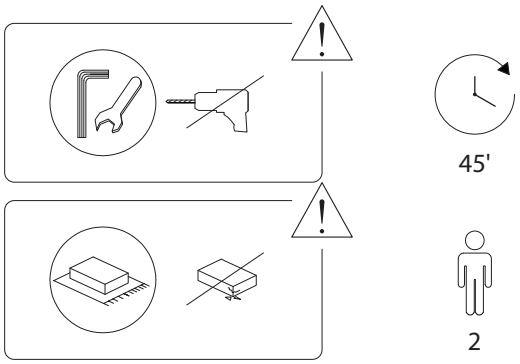
45'
2

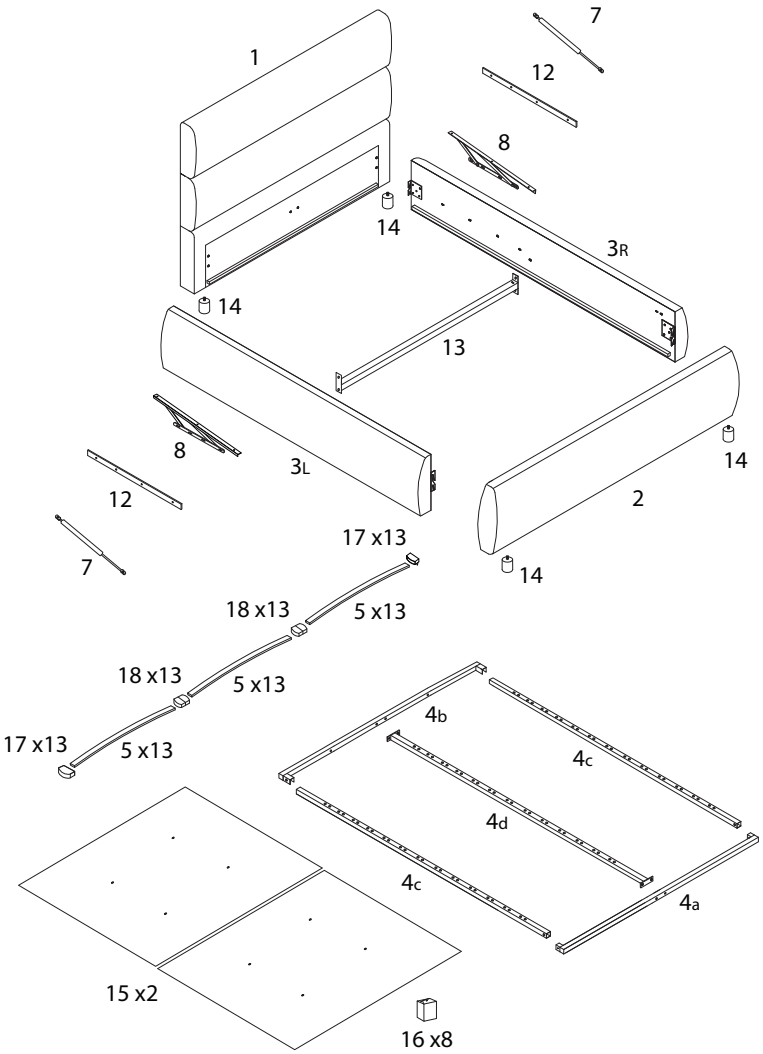
1
7
12
8
14
3R
14
13
8
3L
14
12
2
7
17 x13
14
18 x13
5 x13
18 x13
5 x13
17 x13
5 x13
4b
4c
4d
4c
4a
15 x2
16 x8

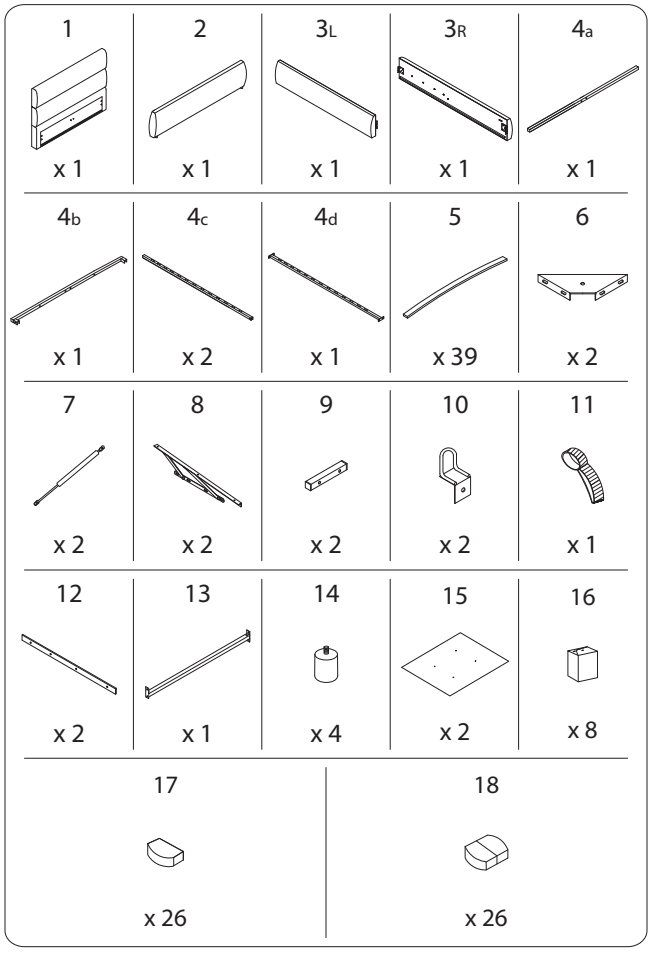
1 x 1
2 x 1
3L x 1
3R x 1
4a x 1
4b x 1
4c x 2
4d x 1
5 x 39
6 x 2
7 x 2
8 x 2
9 x 2
10 x 2
11 x 1
12 x 2
13 x 1
14 x 4
15 x 2
16 x 8
17 x 26
18 x 26

A	B	C
M8 x 50	M8 x 30	M6 x 25
x 14	x 8	x 12
D	**E**	**F**
M6 x 40	M6 x 50	
x 8	x 4	x 14
G	**H**	**I**
	Ø19	Ø16
x 22	x 22	x 24
J	**K**	**L**
M8	M6	
x 1	x 1	x 1
	M	
	x 6	

1

1	2	14
x 1	x 1	x 4

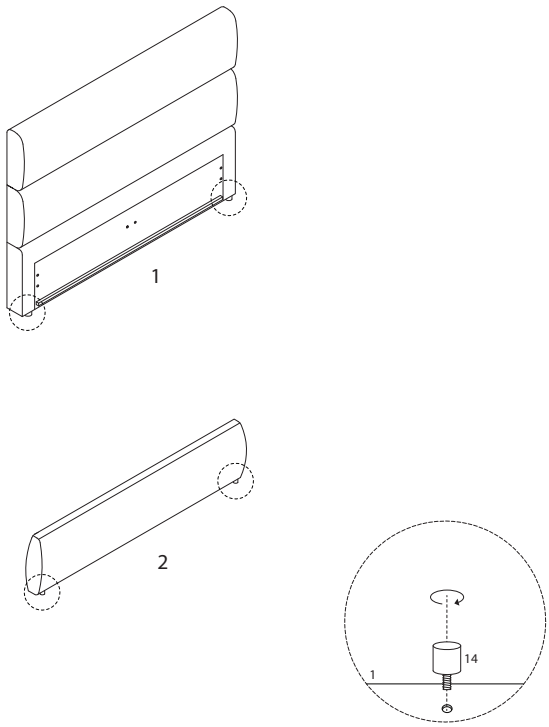

2

3L	3R	B	G	H	J
		M8 x 30		Ø19	M8
x 1	x 1	x 8	x 8	x 8	x 1

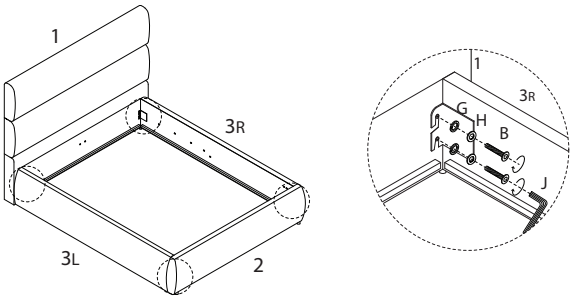

4

15	16
x 2	x 8

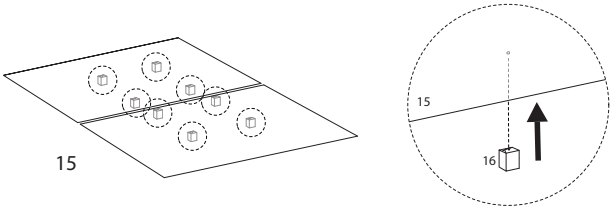

3

9	E	I	K
	M6 x 50	Ø16	M6
x 2	x 4	x 4	x 1

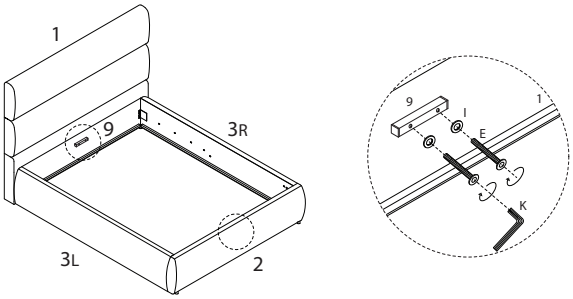

5

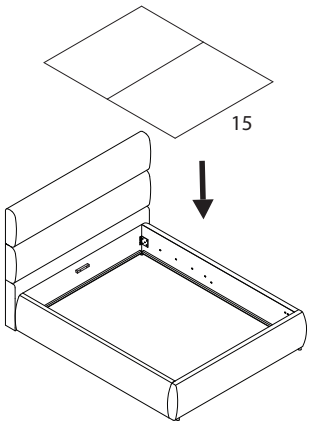

6

13	C	I	K
x 1	M6 x 25 x 6	Ø16 x 6	M6 x 1

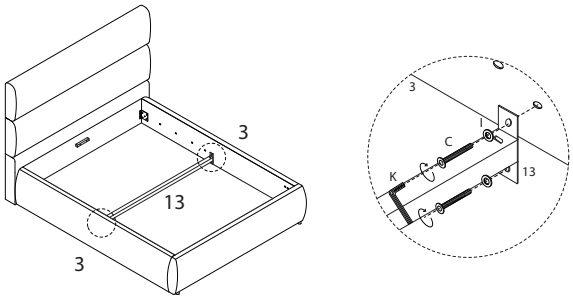

7

6	C	I	K
x 2	M6 x 25 x 6	Ø16 x 6	M6 x 1

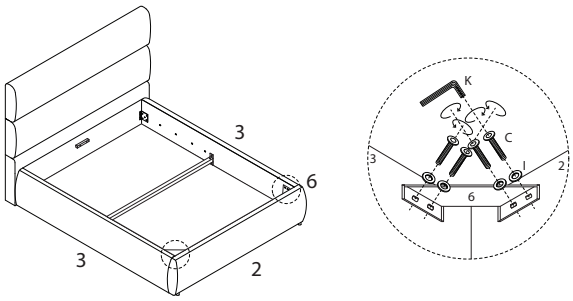

8

8	12	D	I	K
x 2	x 2	M6 x 40 x 8	Ø16 x 8	M6 x 1

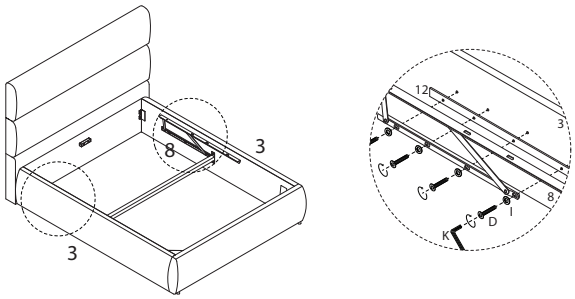

!

4a	4b	4c	4d
x 1	x 1	x 2	x 1

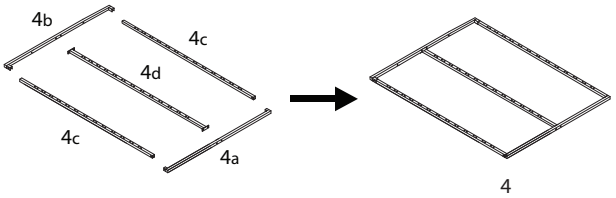

9

4a	11
x 1	x 1

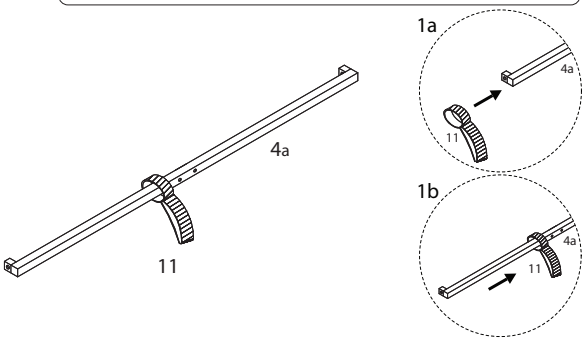

11

A	F	G	J	L
M8 x 50 x 8	x 8	x 8	M8 x 1	x 1

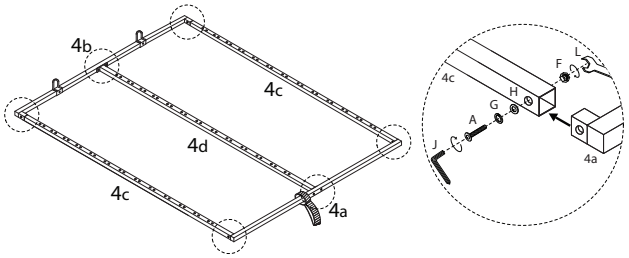

10

4b	10	A	F	G	J	L
x 1	x 2	M8 x 50 x 2	x 2	x 2	M8 x 1	x 1

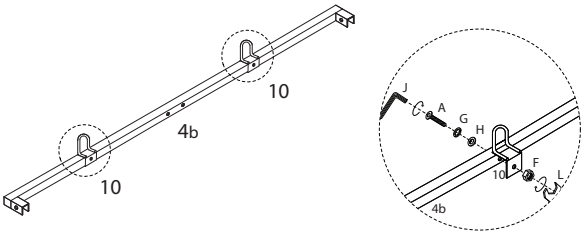

12

A	F	G	J	L
M8 x 50 x 4	x 4	x 4	M8 x 1	x 1

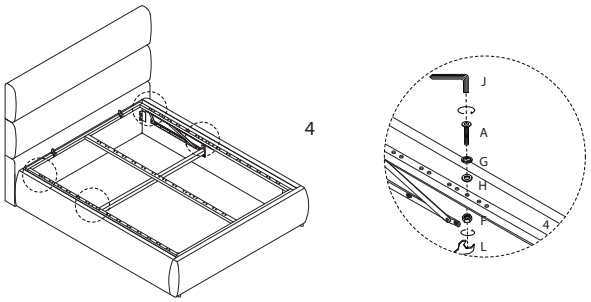

13

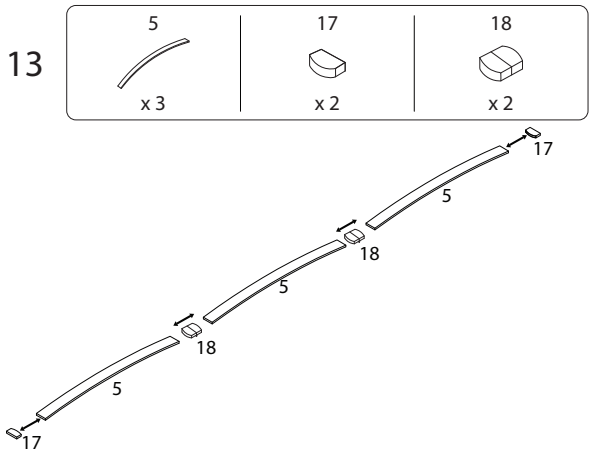
5
x 3
17
x 2
18
x 2
17
5
18
5
18
5
17

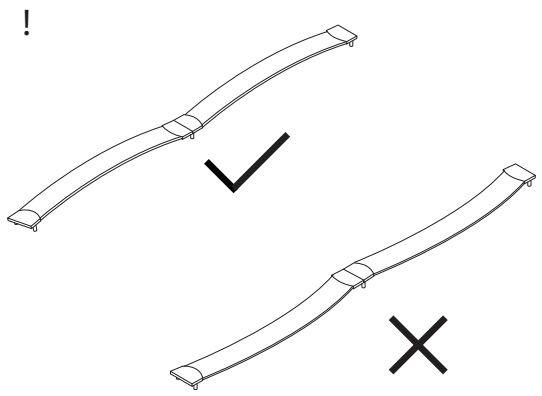
!

14

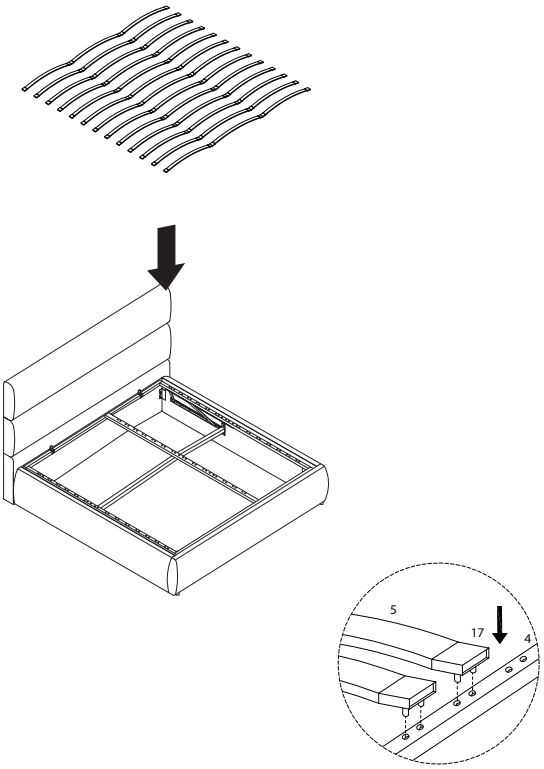
5
17
4

15

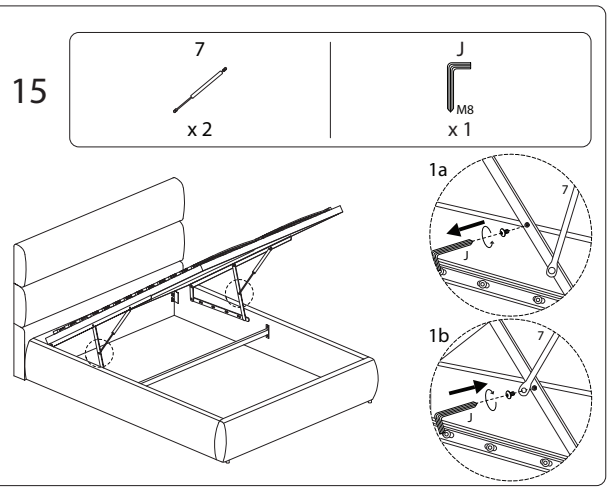
7
x 2
J
M8
x 1
1a
7
J
1b
7
J

16

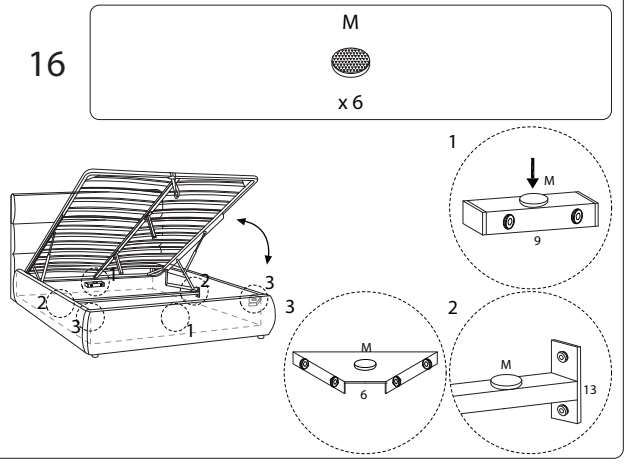
M
x 6
1
M
9
2
3
2
3
1
3
M
6
2
M
13