BOURKE

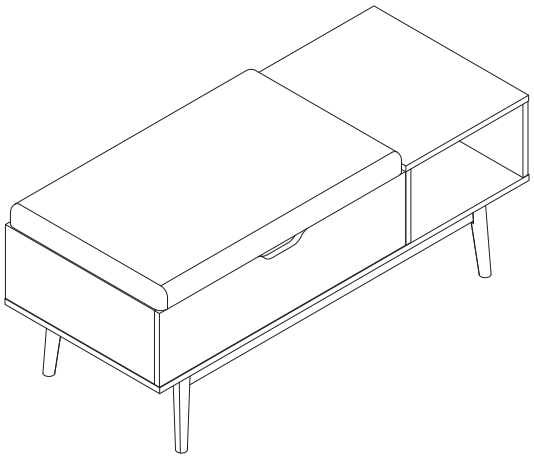

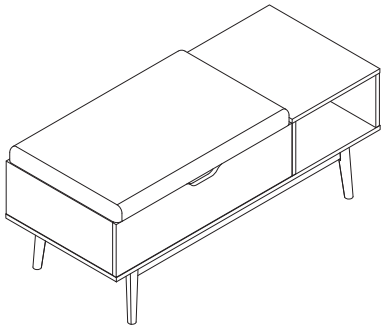

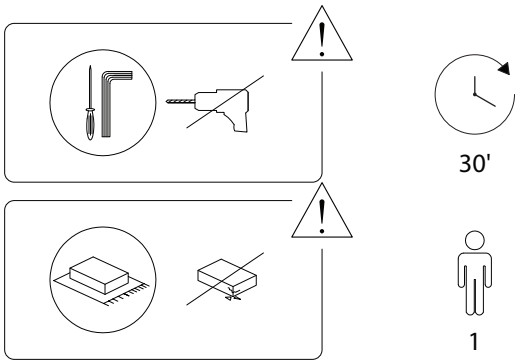
30'
1

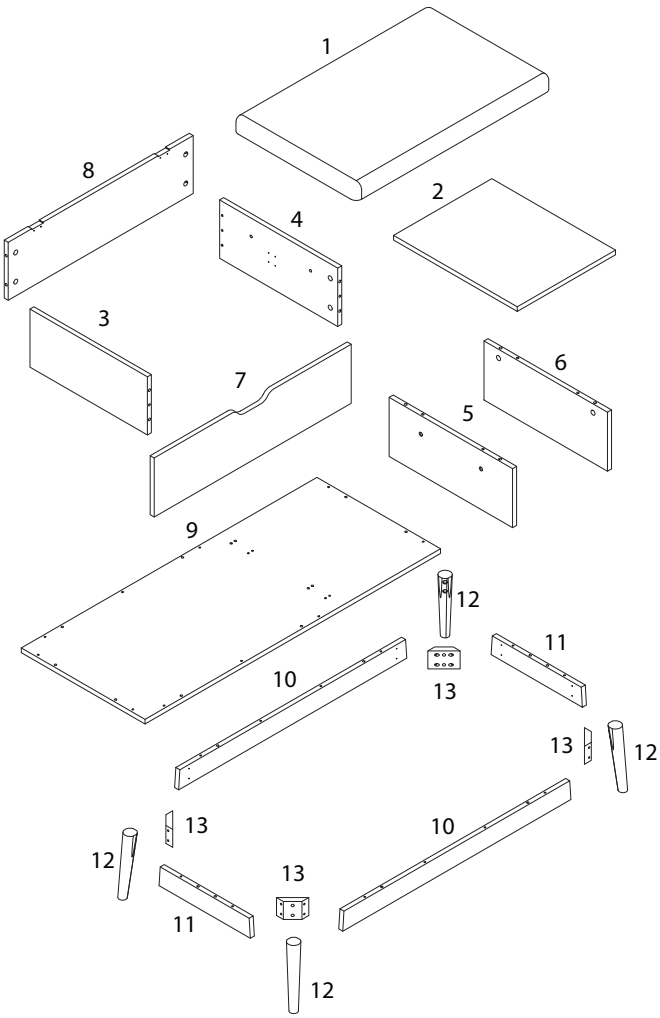
1
8
2
4
3
7
6
5
9
12
11
10
13
13
12
13
10
12
13
11
12

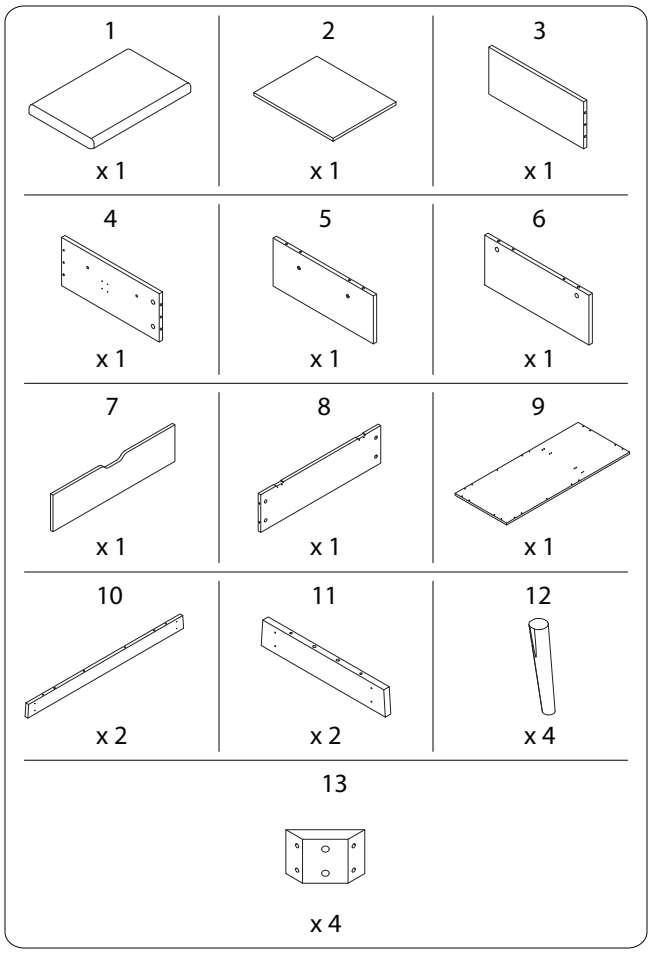
1
x 1
2
x 1
3
x 1
4
x 1
5
x 1
6
x 1
7
x 1
8
x 1
9
x 1
10
x 2
11
x 2
12
x 4
13
x 4

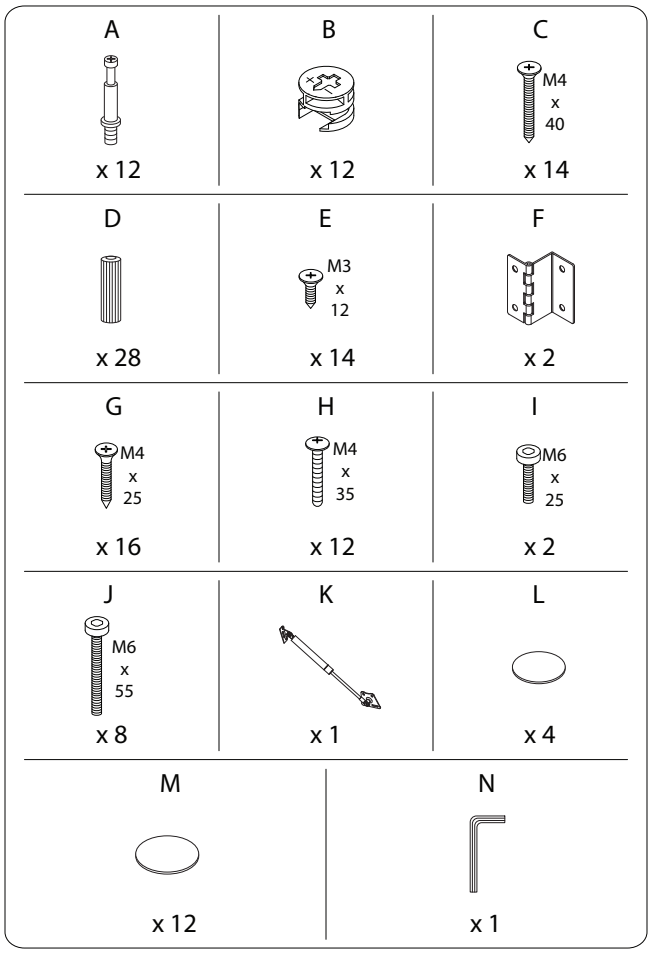
A
x 12
B
x 12
C
M4 x 40
x 14
D
x 28
E
M3 x 12
x 14
F
x 2
G
M4 x 25
x 16
H
M4 x 35
x 12
I
M6 x 25
x 2
J
M6 x 55
x 8
K
x 1
L
x 4
M
x 12
N
x 1

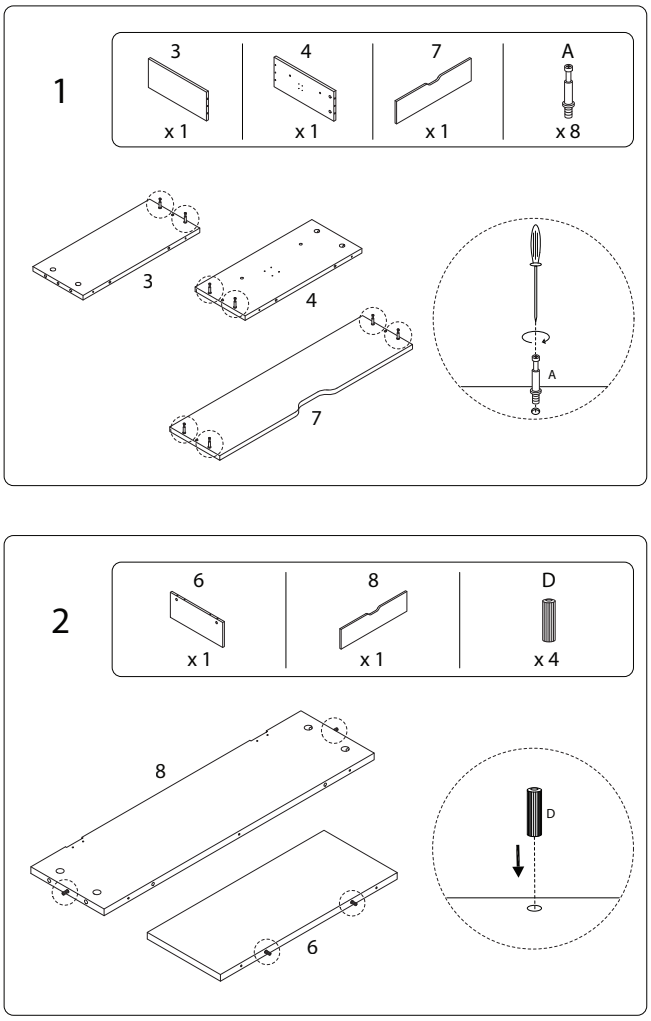
1
3
x 1
4
x 1
7
x 1
A
x 8
3
4
7
A
2
6
x 1
8
x 1
D
x 4
8
6
D

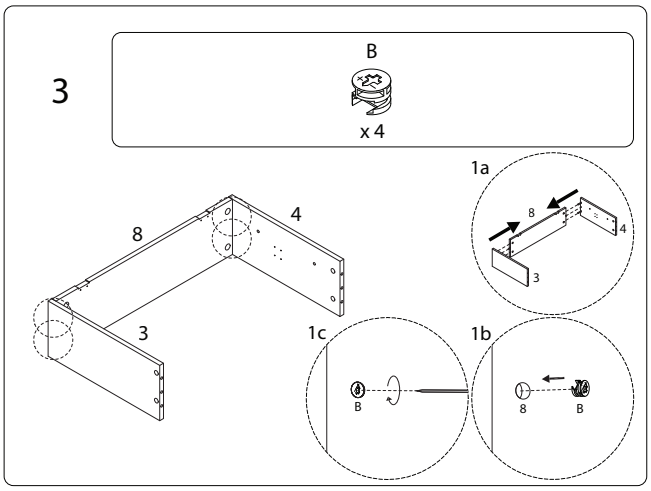
3
B
x 4
8
4
3
1a
8
4
3
1c
B
1b
8
B

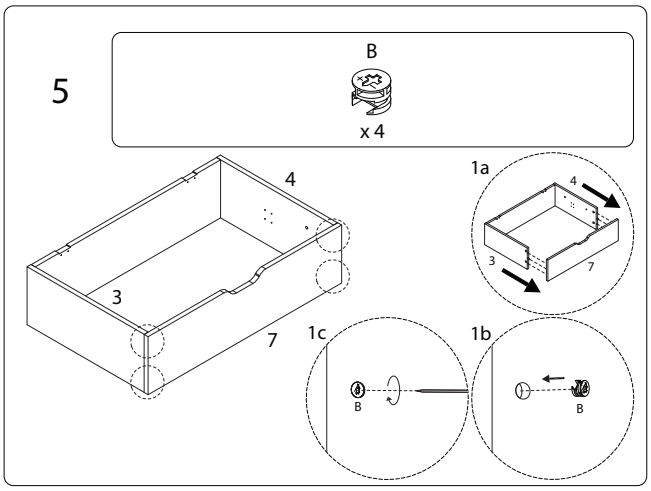
5
B
x 4
4
3
7
1a
4
3
7
1c
B
1b
B

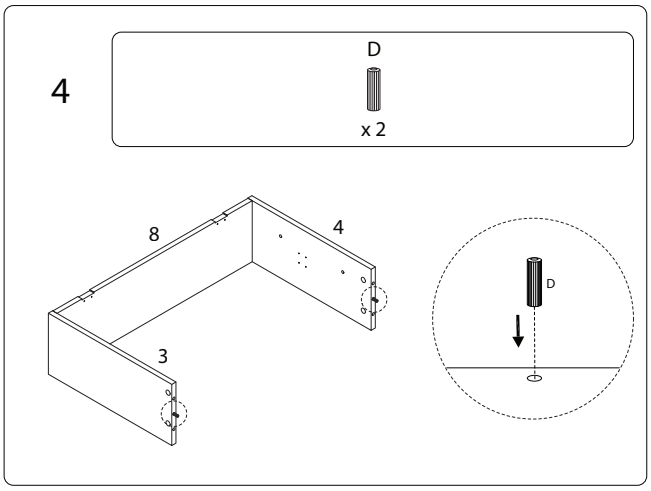
4
D
x 2
8
4
3
D

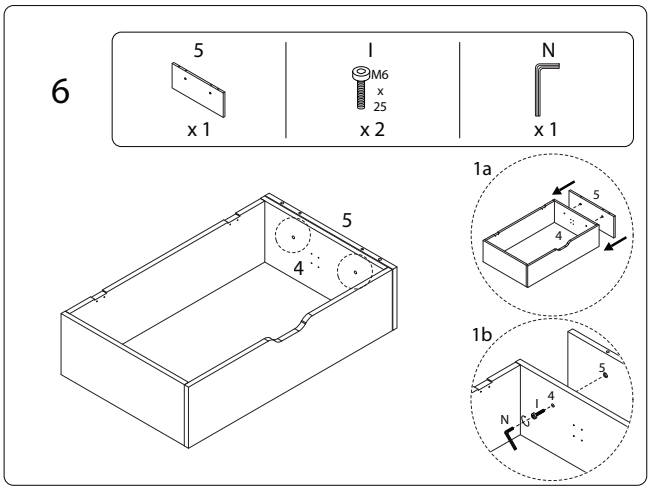
6
5
x 1
I
M6 x 25
x 2
N
x 1
5
4
1a
5
4
1b
5
4
I
N

7

D

x 10

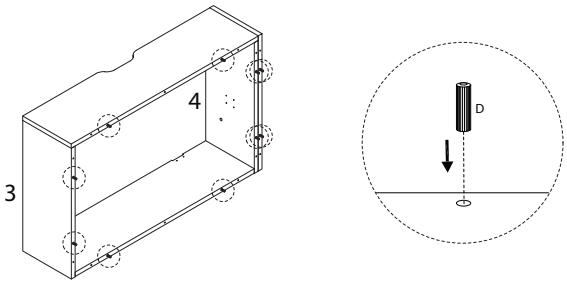

8

9

x 1

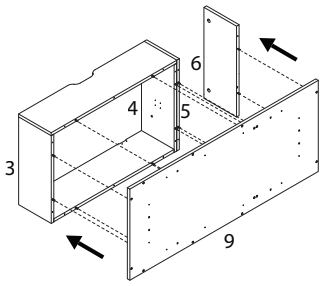

9

C

M4 x 40

x 14

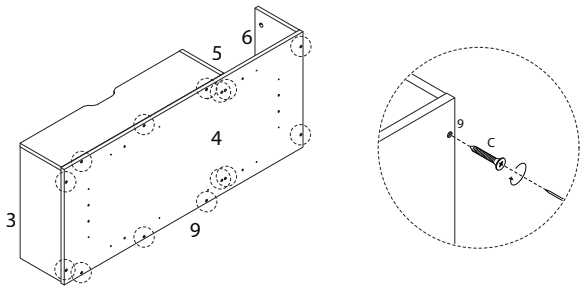

10

10	11	13	G
x 2	x 2	x 4	x 16

M4 x 25

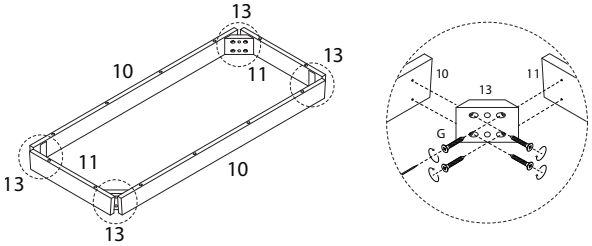

11

D

x 8

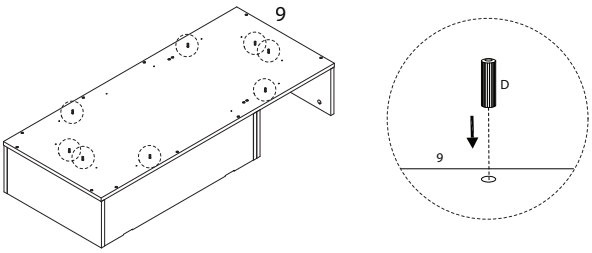

12

H

M4 x 35

x 12

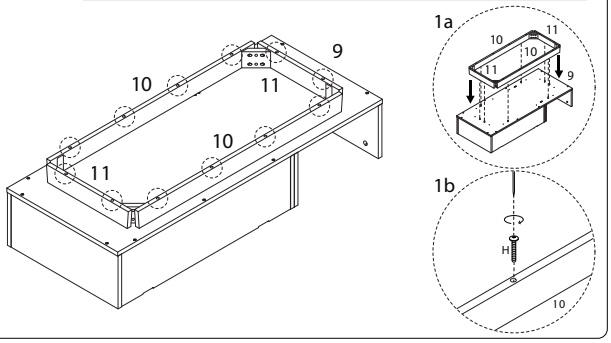

13

12	J	N
x 4	x 8	x 1

M6 x 55

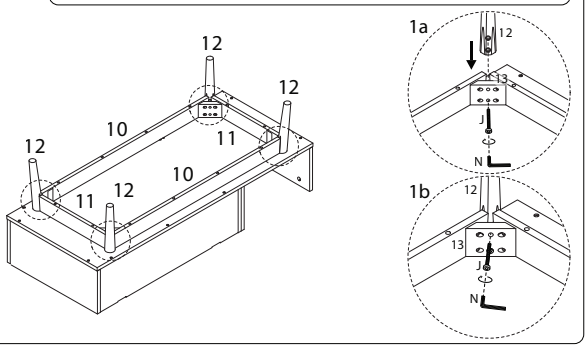

14

L

x 4

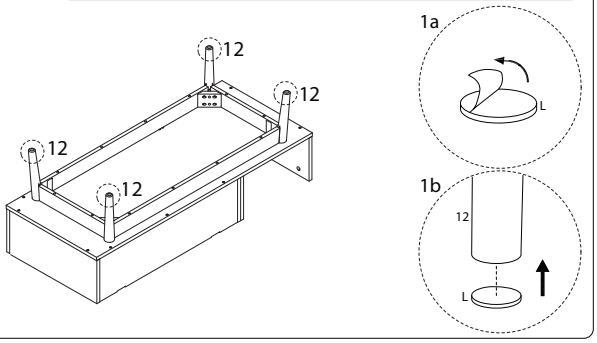

15

D

x 4

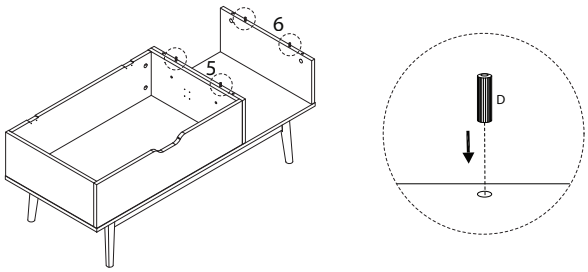

16

2

x 1

A

x 4

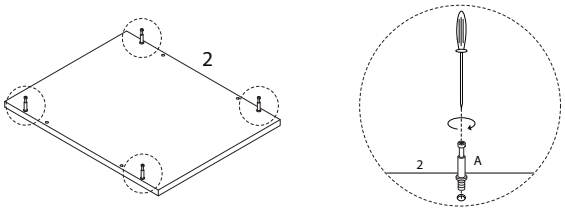

17

B

x 4

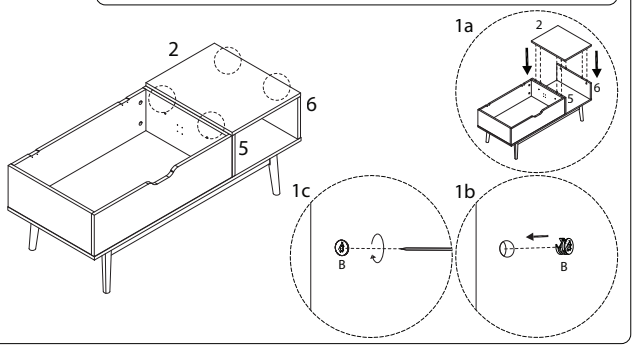

18

M

x 12

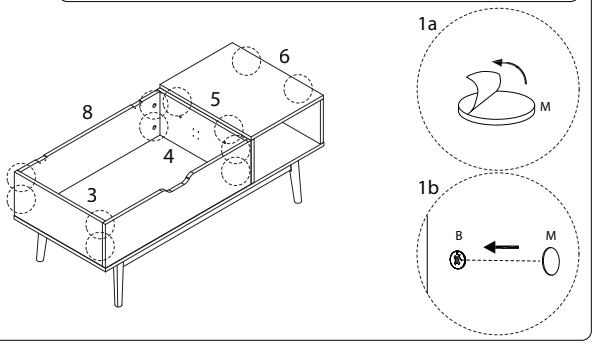

19

1

x 1

E

M3 x 12

x 4

F

x 2

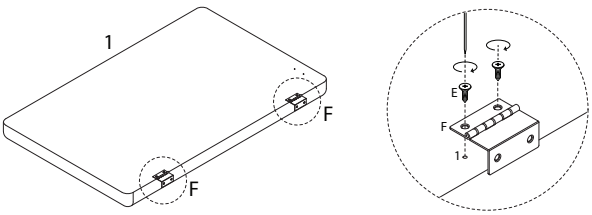

20

E

M3 x 12

x 4

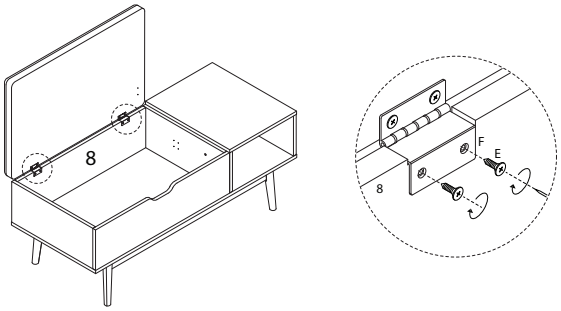

21

E

M3 x 12

x 6

K
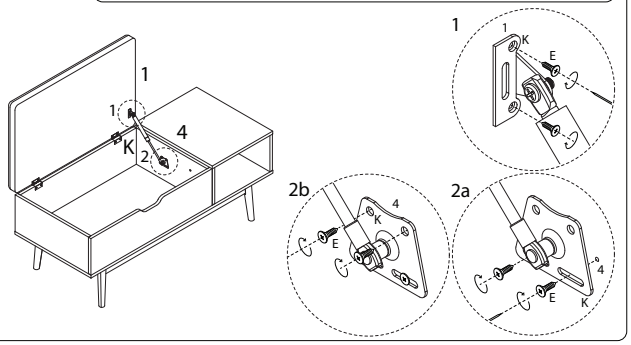
x 1