AVA

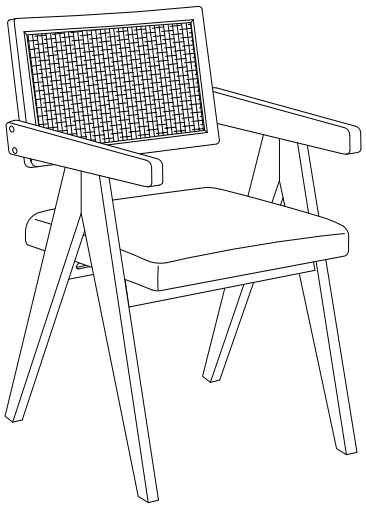

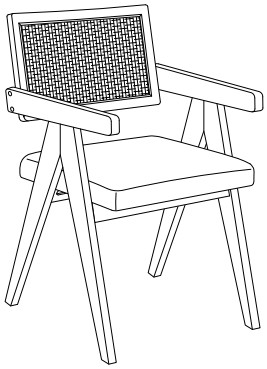

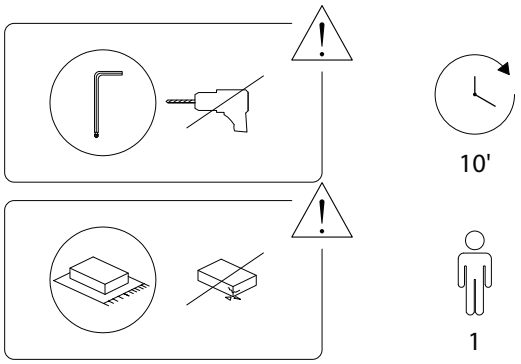

1/4

1R	1L	2	3	4
x 1	x 1	x 1	x 2	x 1

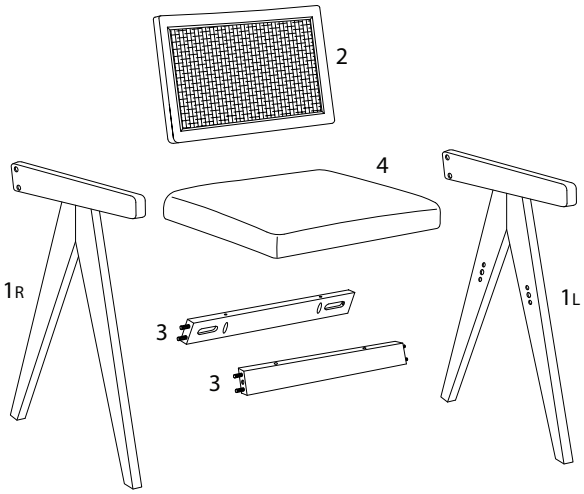

A	B	C	D
M6 x 50	M6 x 30		
x 4	x 8	x 1	x 4

2/4

1

1R	3	A	C
x 1	x 2	M6 x 50 x 2	x 1

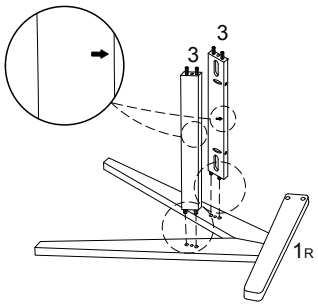

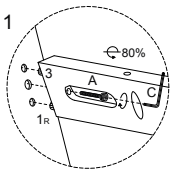

2

1L	A	C
x 1	M6 x 50 x 2	x 1

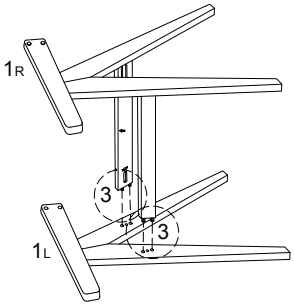

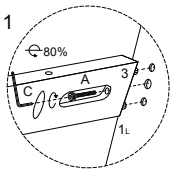

3/4

3

2	B	C	D
x 1	M6 x 30 x 4	x 1	x 4

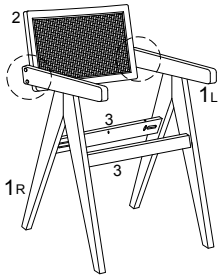

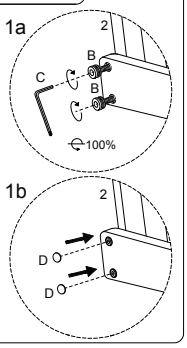

4

4	B	C
x 1	M6 x 30 x 4	x 1

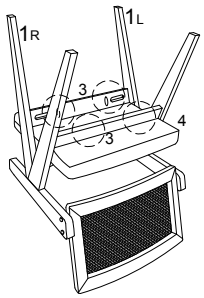

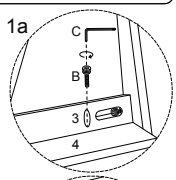

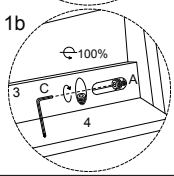

2278/AVA/160425/