BANGOR

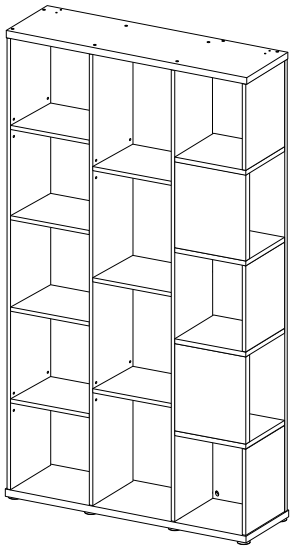

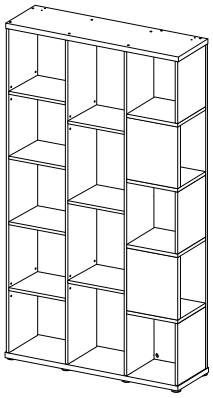

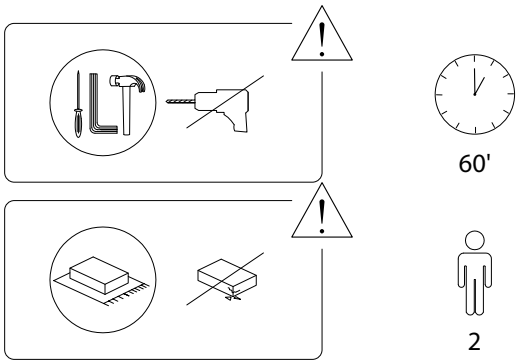

1	2	3	4	5	6
x 1	x 1	x 1	x 3	x 1	x 1

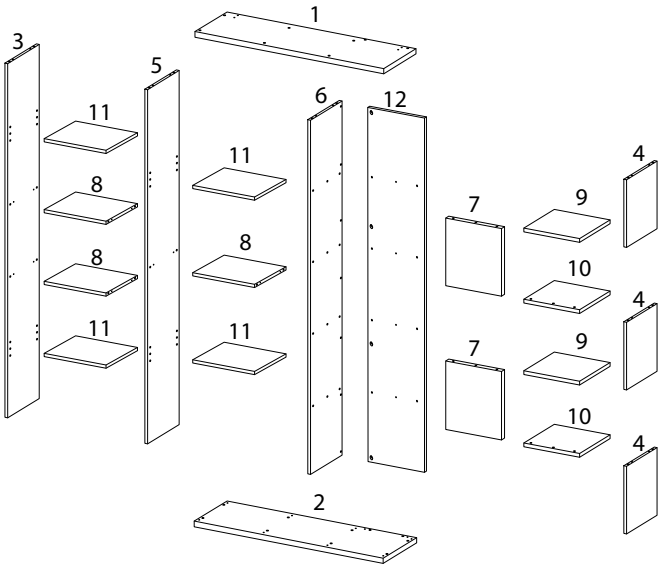

7	8	9	10	11	12
x 2	x 3	x 2	x 2	x 4	x 1

A	B	C
x 32	x 32	x 12
D	**E**	**F**
x 67	x 16	M10 x 33.5 x 24
G	**H**	**I**
x 8	M4 x 10 x 4	x 2
J		
x 20		

1

1	H	I
x 1	M4 x 10 x 4	x 2

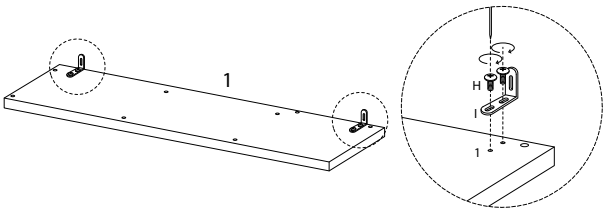

2

B
x 2

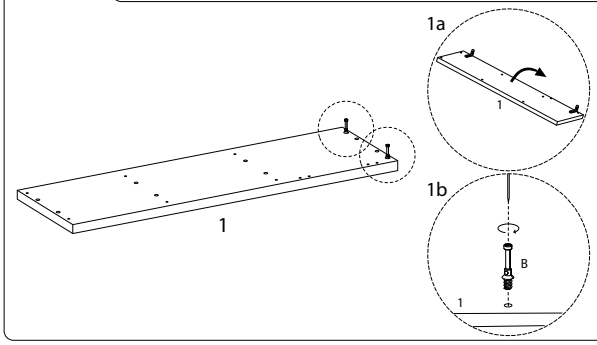

3

3	B
x 1	x 4

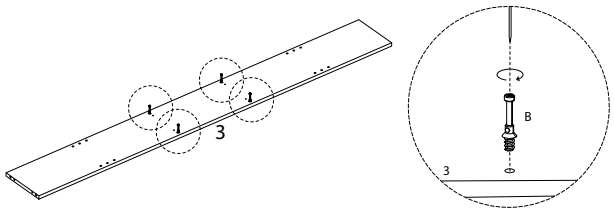

4

D
x 4

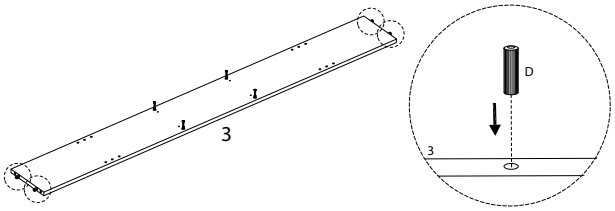

5

12	B
x 1	x 4

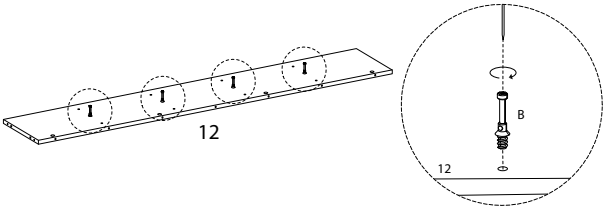

6

D
x 7

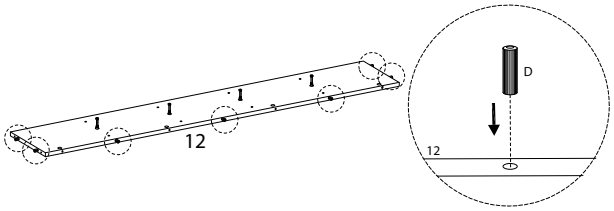

7

5	B
x 1	x 2

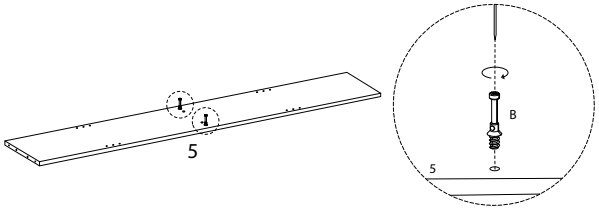

8

B
x 4

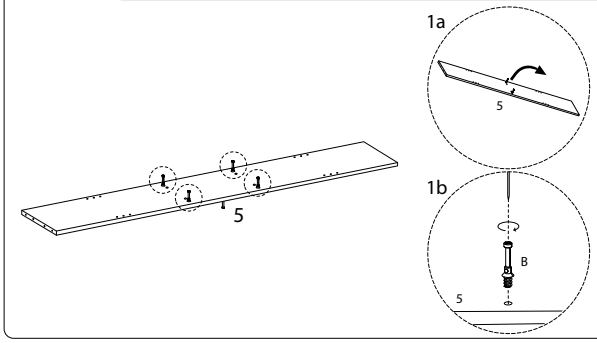

9

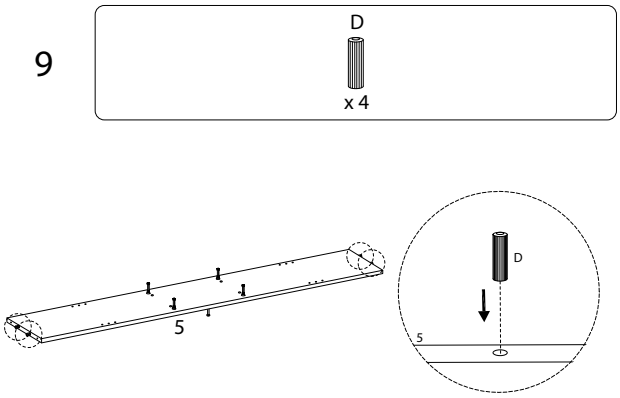

10

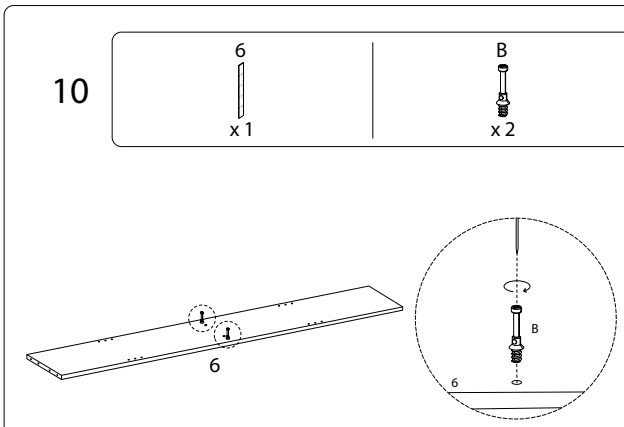

11

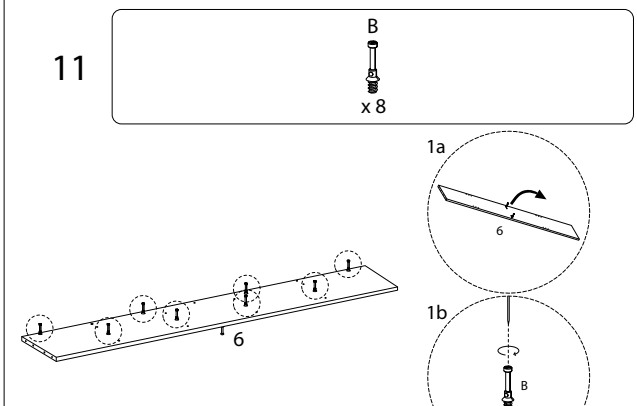

12

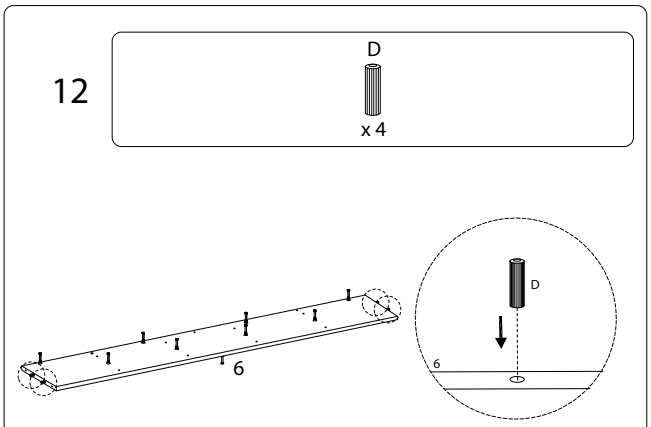

13

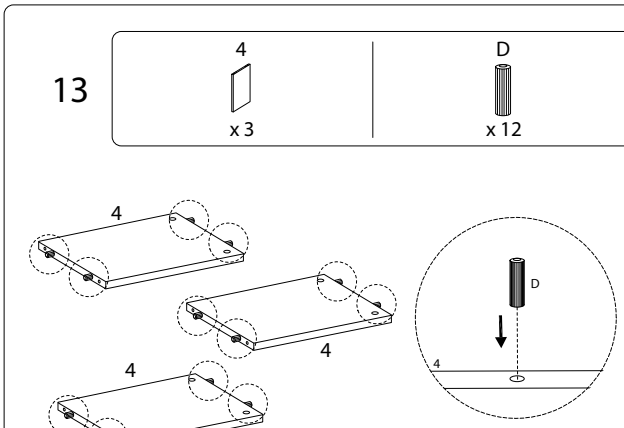

14

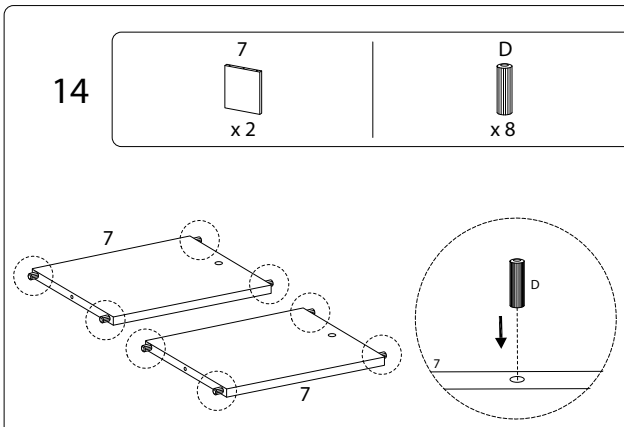

15

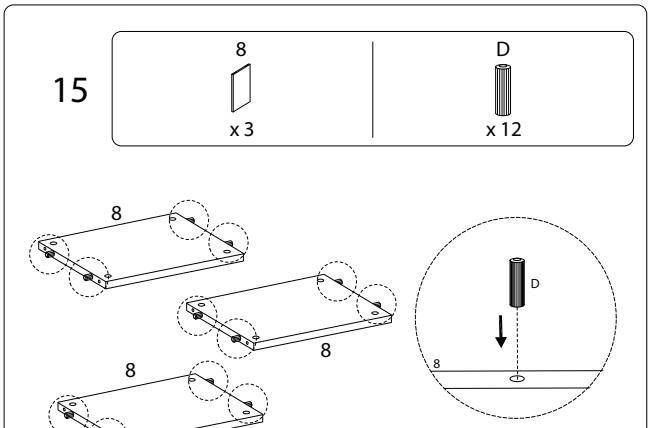

16

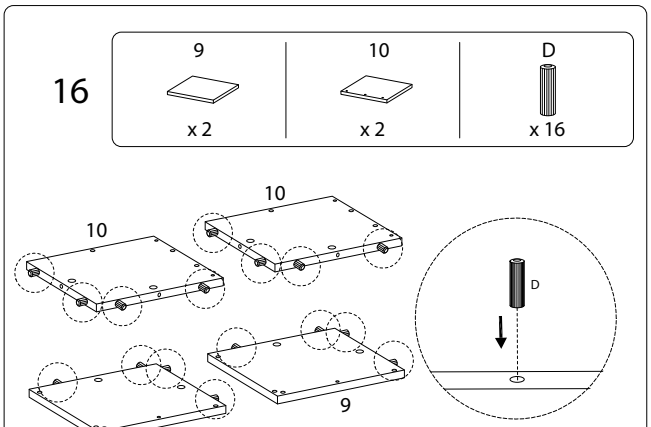

17

B
x 6

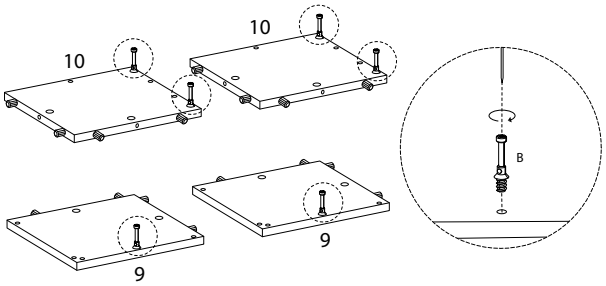

18 x 2

F
M10 x 33.5
x 2

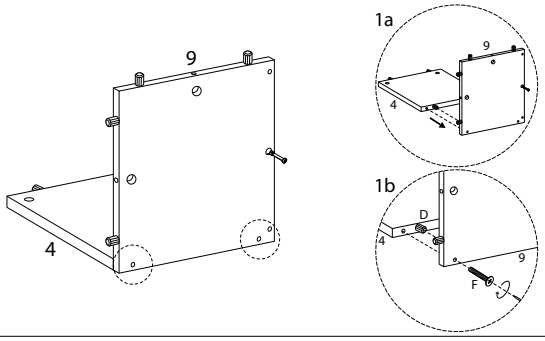

19

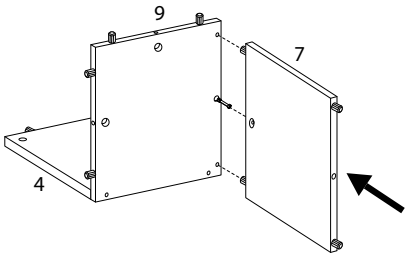

20

A
x 1

J
x 1

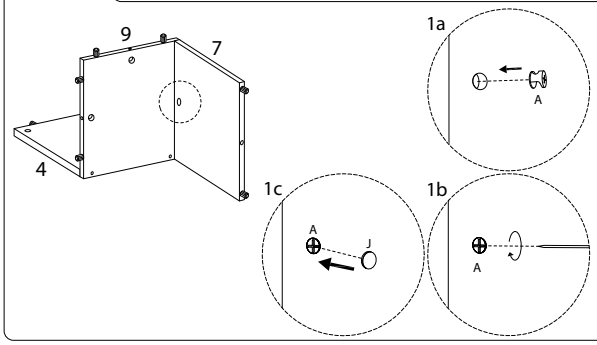

21

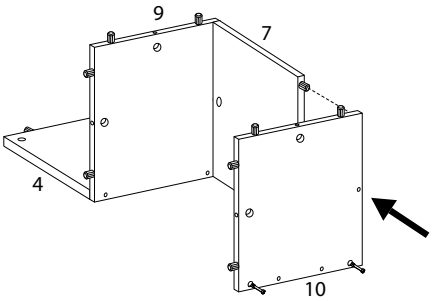

22

F
M10 x 33.5
x 1

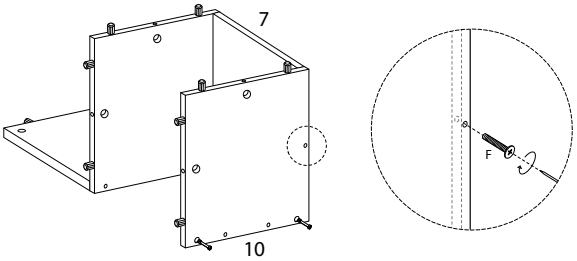

23

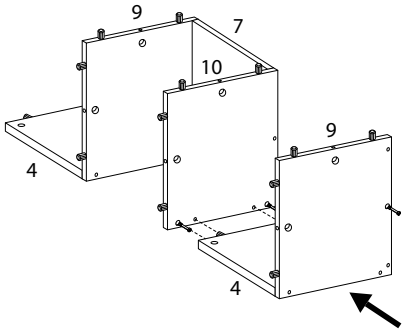

24

A
x 2

J
x 2

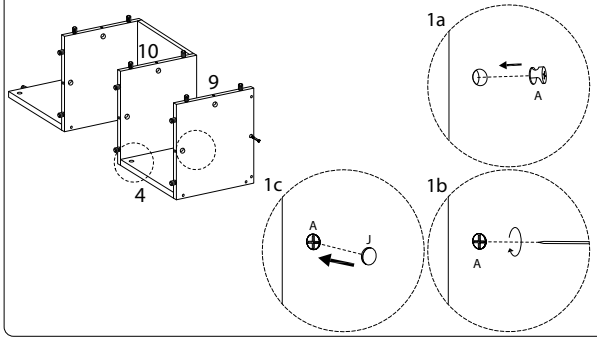

25

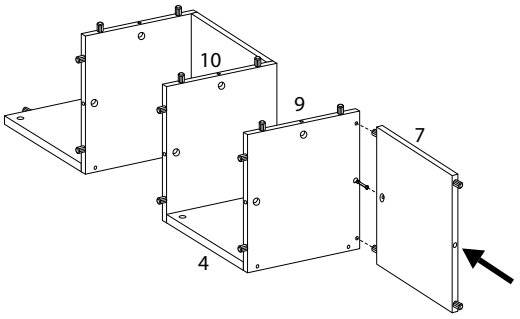

26

A	J
x 1	x 1

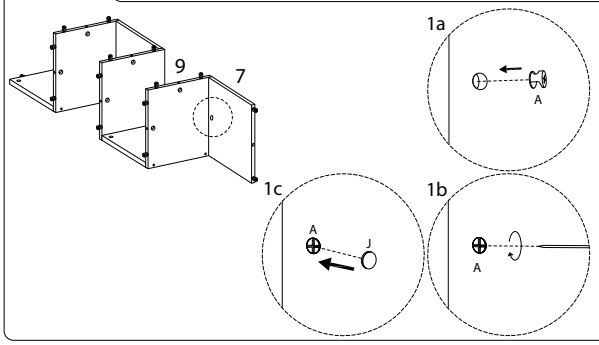

27

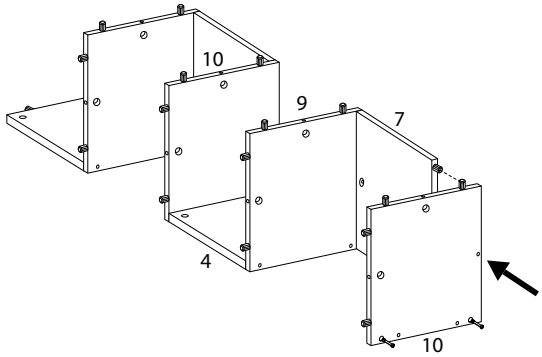

28

F
M10 x 33.5
x 1

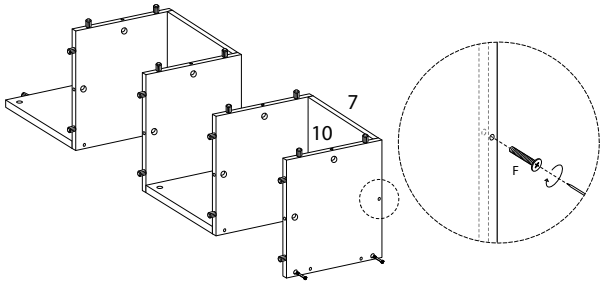

29

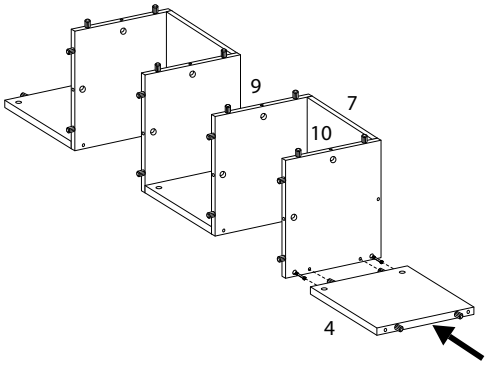

30

A	J
x 2	x 2

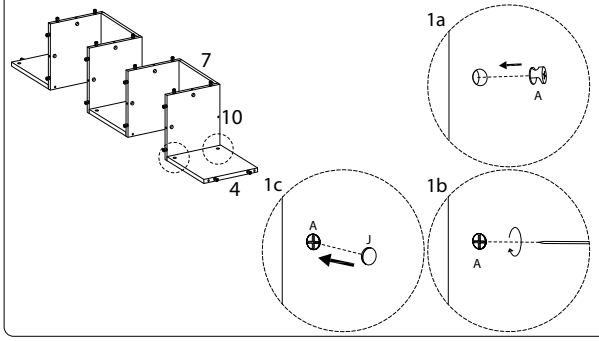

31

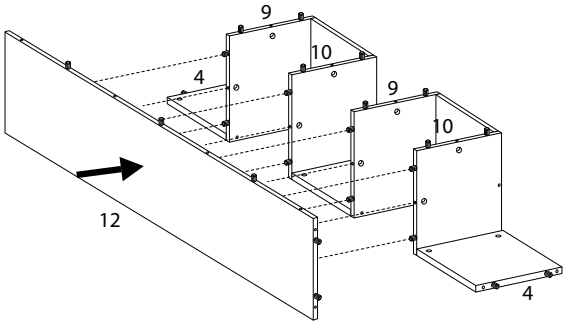

32

A	J
x 4	x 4

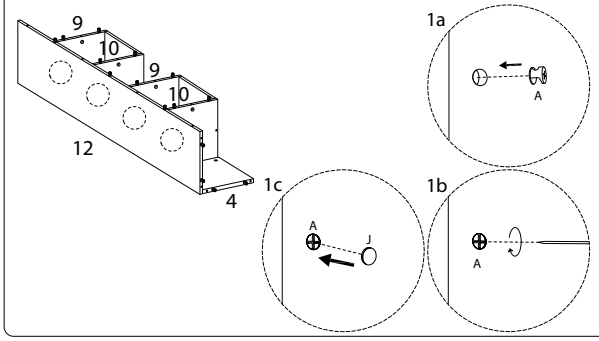

33

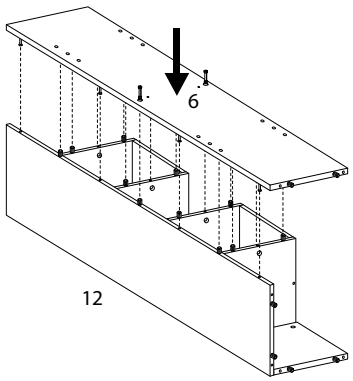

34

A	J
x 8	x 8

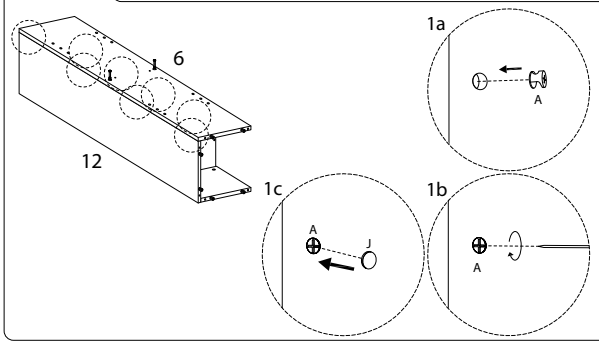

35

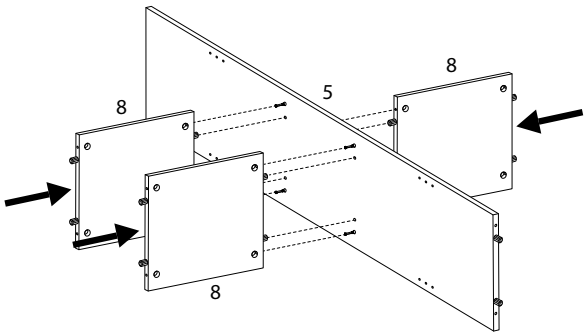

36

A	C
x 6	x 6

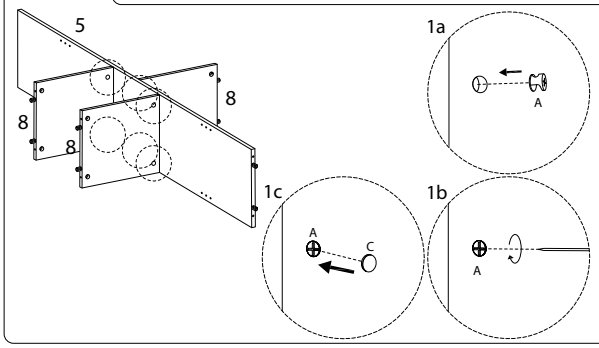

37

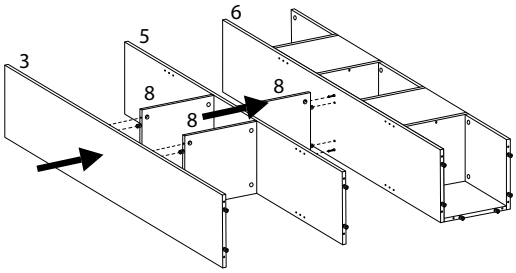

38

A	C
x 6	x 6

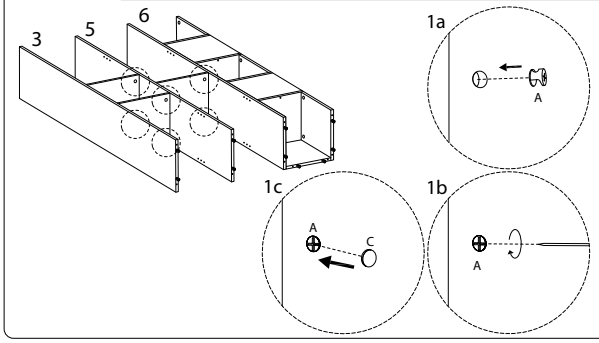

39

2
x 1

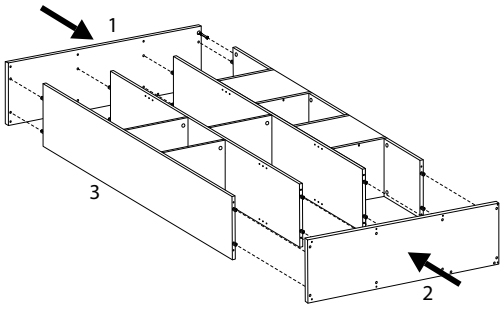

40

F
M10 x 33.5
x 18

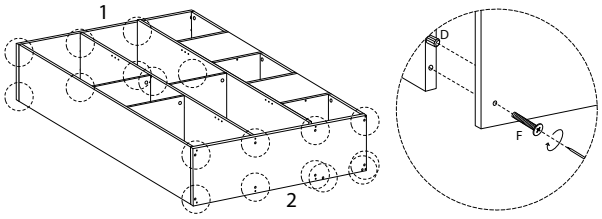

41

A	J
x 2	x 2

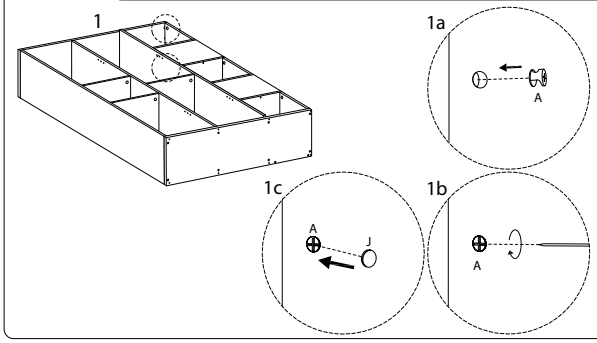

42

G
x 8

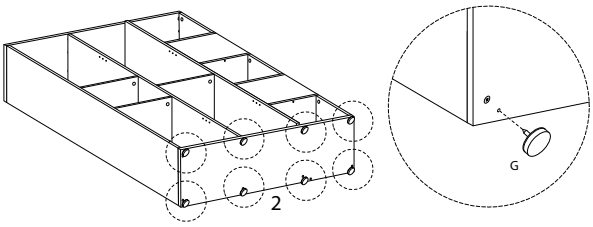

43

E
x 16

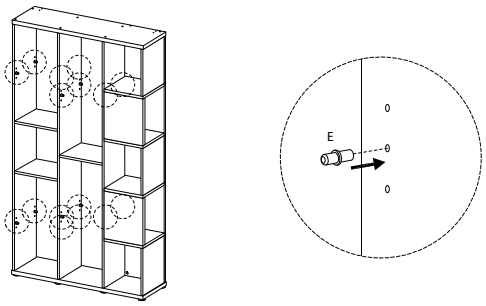

44

11
x 4

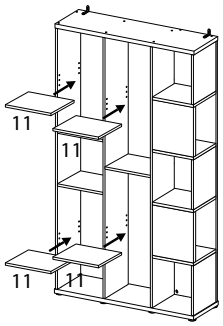
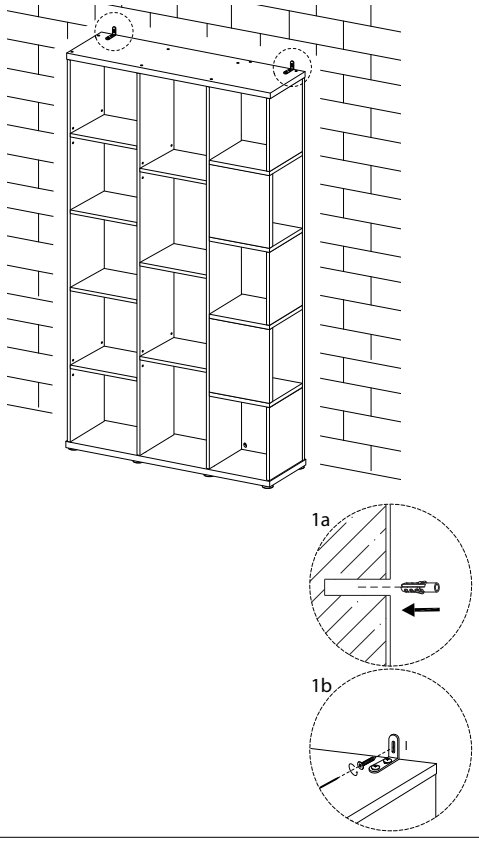
!