COSTELLO

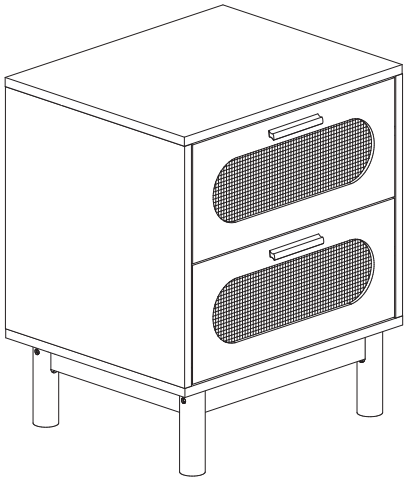

1/15

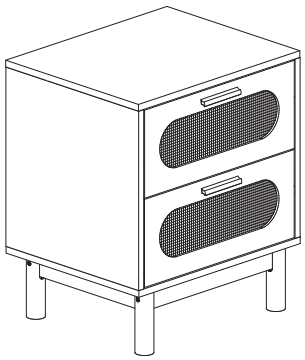

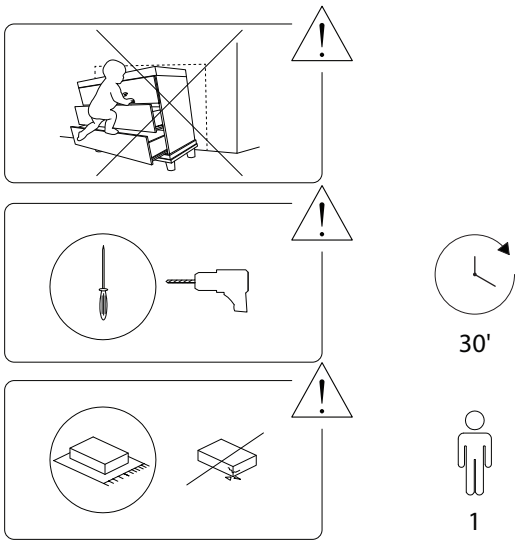

2/15

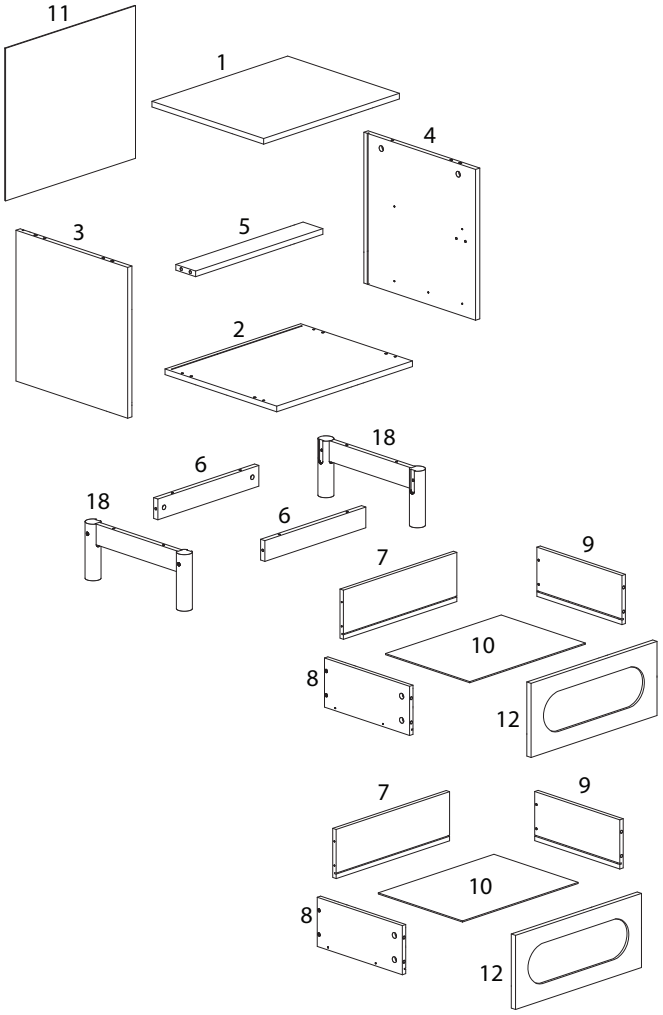

3/15

1 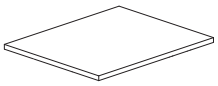 x 1	2 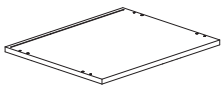 x 1	
3 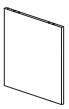 x 1	4 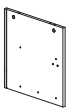 x 1	
5  x 1	6 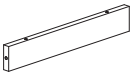 x 2	7  x 2
8 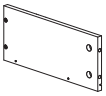 x 2	9 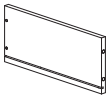 x 2	10 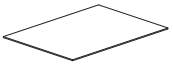 x 2
11 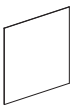 x 1	12 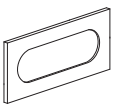 x 2	18  x 2

4/15

A	B	C	D
			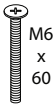 M6 x 60
x 16	x 16	x 8	x 4
E	**F**	**G**	**H**
	 M3 x 12	 M4 x 30	 M4 x 25
x 4	x 20	x 8	x 4
I	**J**	**K**	**L**
 M4 x 45	 M3 x 14		 M4 x 12
x 8	x 4	x 4	x 1
M	**N**	**O**	**P_{CL}**	**P_{CR}**
			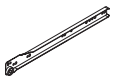	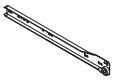
x 1	x 2	x 1	x 2	x 2
P_{DR}	**P_{DL}**	**Q**	**R**	**S**
			 M4 x 35	
x 2	x 2	x 4	x 5	x 2

!

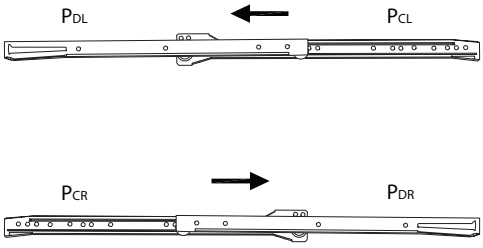

1

1	A	C
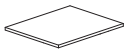		
x 1	x 4	x 4

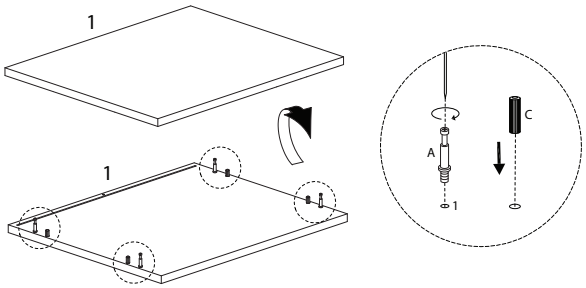

2

3	4	A	F	P_{CL}	P_{CR}
			 M3 x 12		
x 1	x 1	x 4	x 12	x 2	x 2

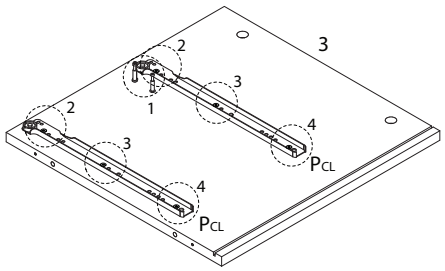

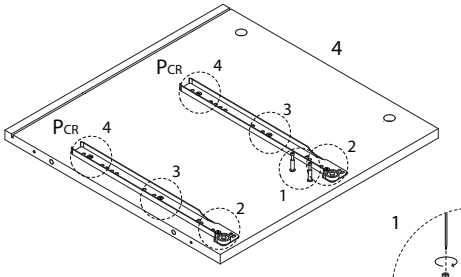

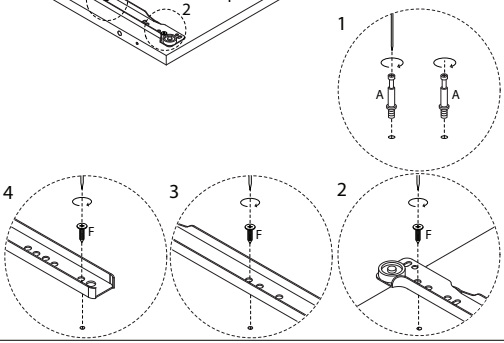

3

5	B
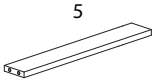	
x 1	x 4

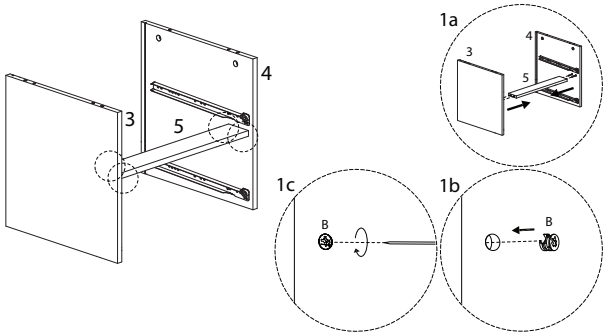

4

C

x 4

5

2 — x 1

R — M4 x 35 — x 4

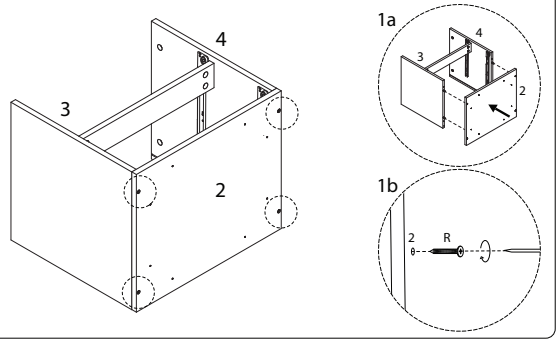

6

6 — x 2

18 — x 2

D — M6 x 60 — x 4

E — x 4

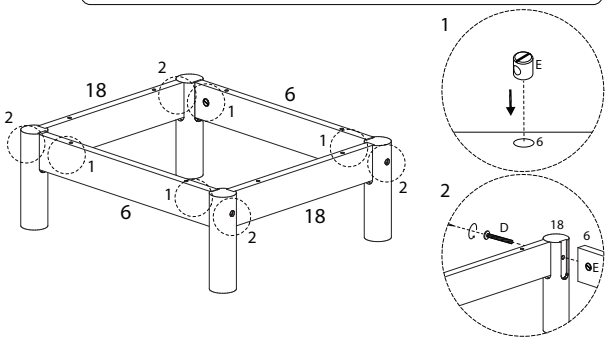

7

I — M4 x 45 — x 8

Q — x 4

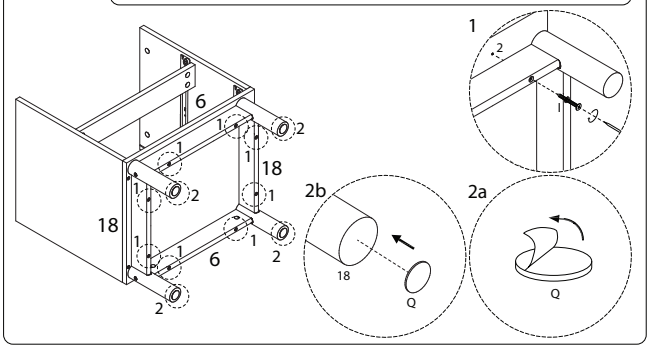

8

11 — x 1

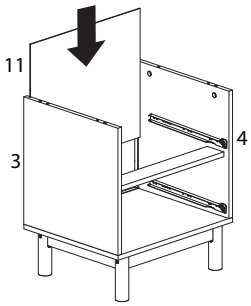

9

B — x 4

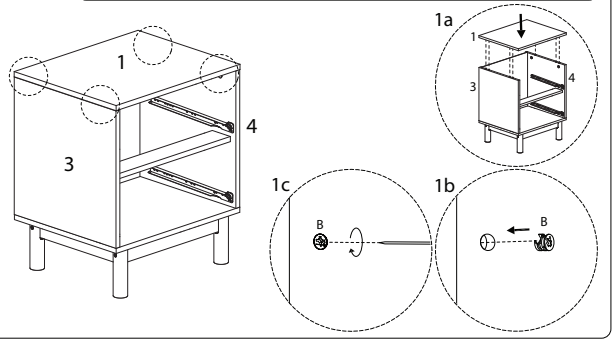

11 x 2

10 — x 1

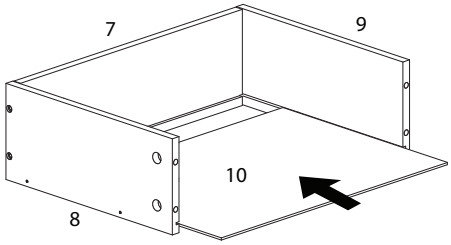

10 x 2

7 — x 1

8 — x 1

9 — x 1

G — M4 x 30 — x 4

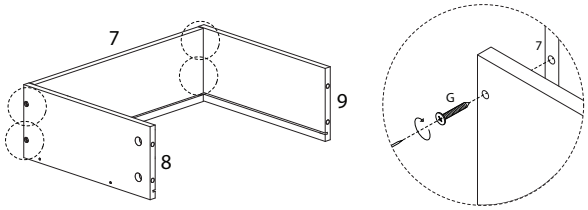

12 x 2

12 — x 1

A — x 4

H — M4 x 25 — x 2

S — x 1

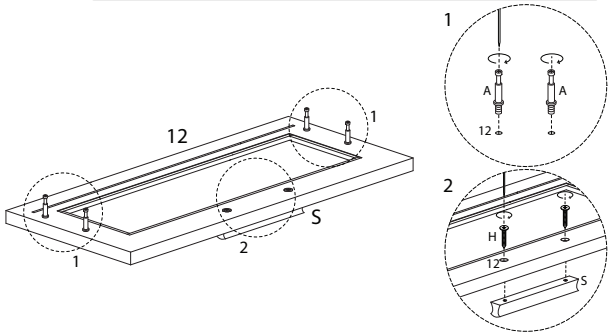

13 x 2

B

x 4

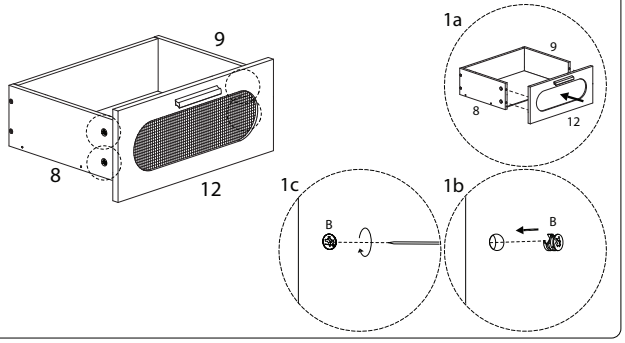

15

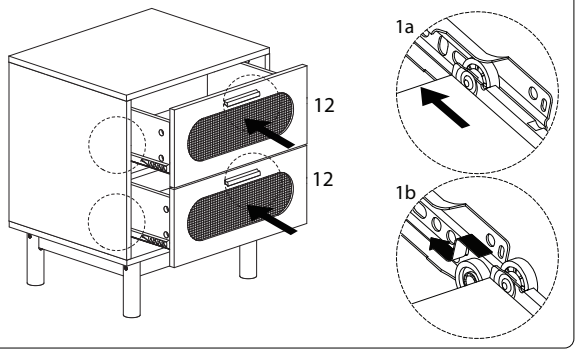

14 x 2

P_{DR}	P_{DL}	F
x 1	x 1	x 4

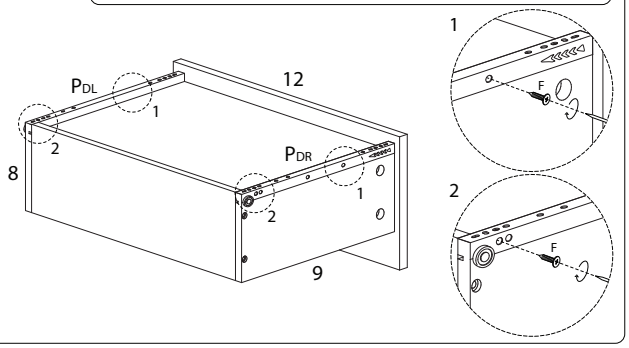

16

J	K
M3 x 14	
x 4	x 4

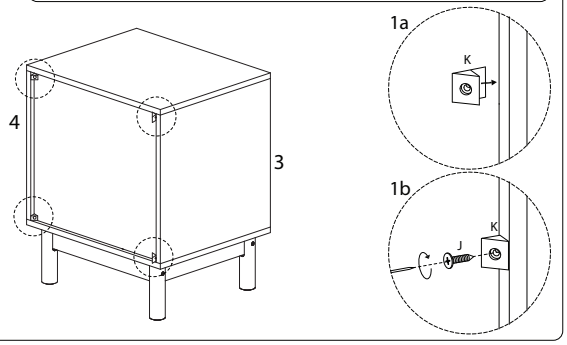

1658/COSTELLO/220126/

1658/COSTELLO/220126/

17

L	M	N
M4 x 12		
x 1	x 1	x 1

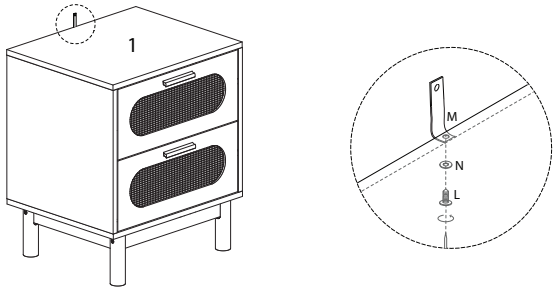

18

N	O	R
		M4 x 35
x 1	x 1	x 1

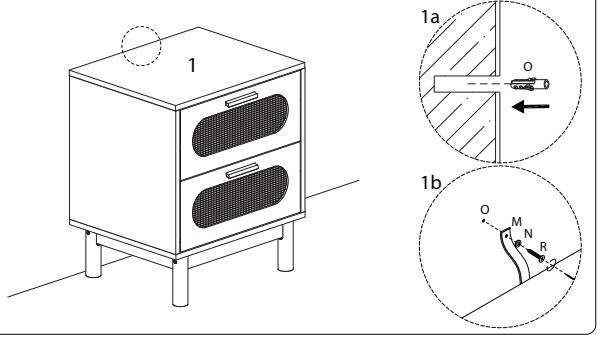

1658/COSTELLO/220126/