CAMERON

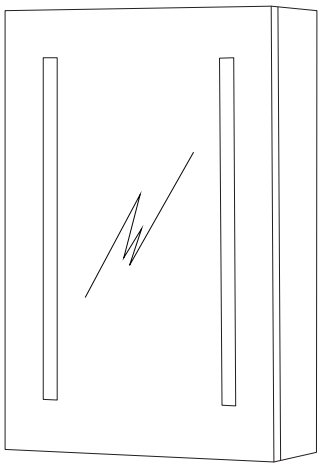

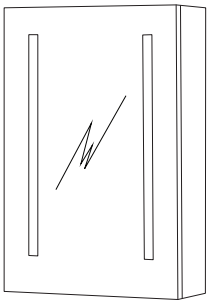

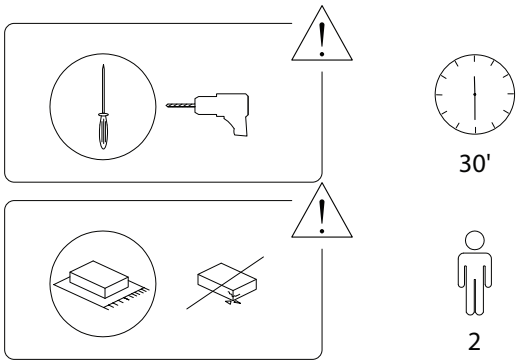

Beliani

Beliani
1496/CAMERON/281123/

A

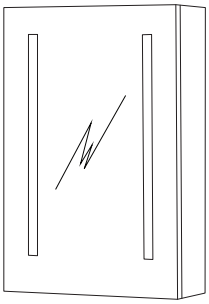

A	B	C	D	E
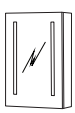			 M3 x 50	
x 1	x 4	x 4	x 4	x 4

Beliani
1496/CAMERON/281123/

1

A	B	C	D	E
			 M3 x 50	
x 1	x 4	x 4	x 4	x 4

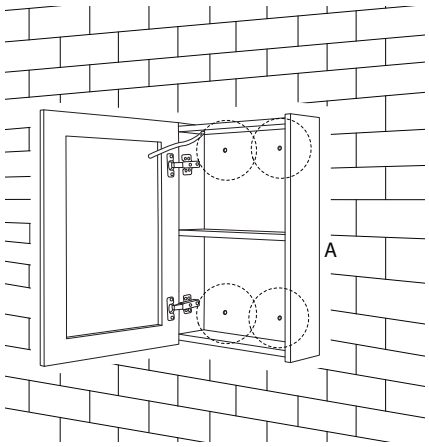

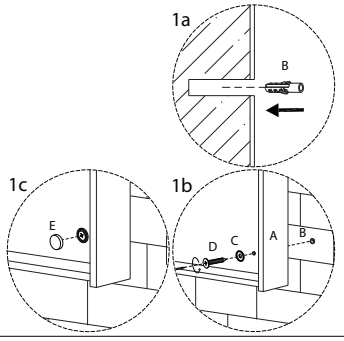

Beliani
1496/CAMERON/281123/

2

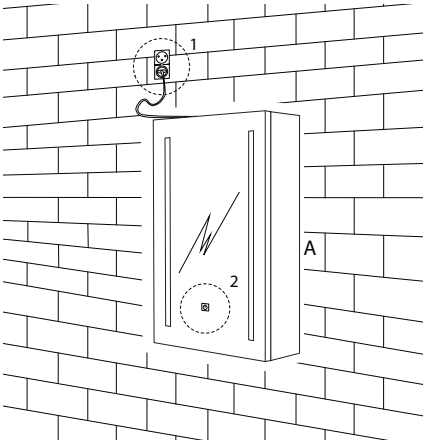

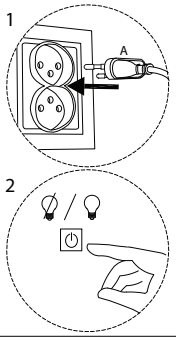

Beliani

1496/CAMERON/281123/