TIMMINS

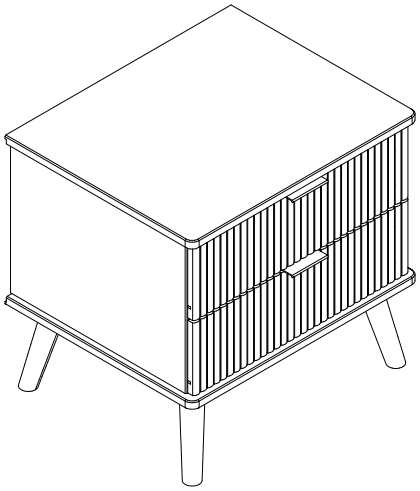

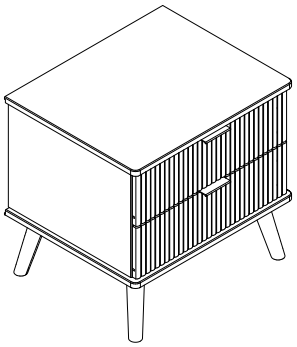

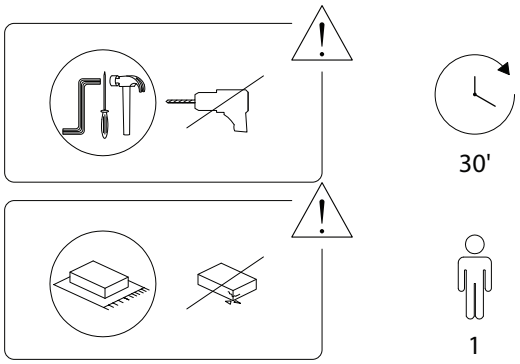
30'
1

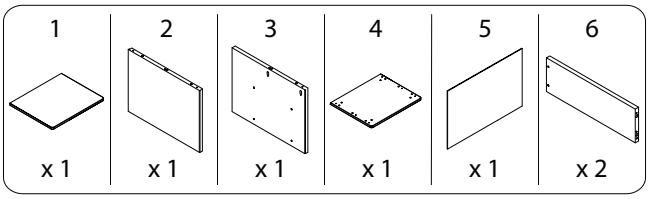
1
x 1
2
x 1
3
x 1
4
x 1
5
x 1
6
x 2

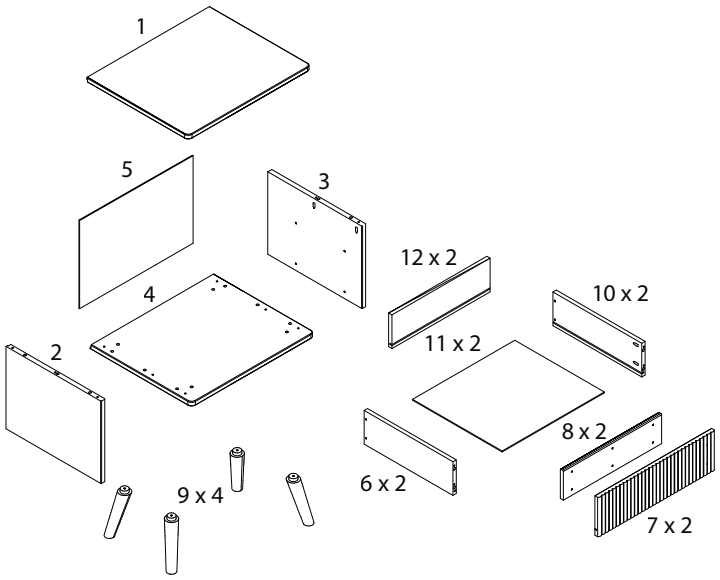
1
5
3
12 x 2
4
10 x 2
2
11 x 2
8 x 2
6 x 2
9 x 4
7 x 2

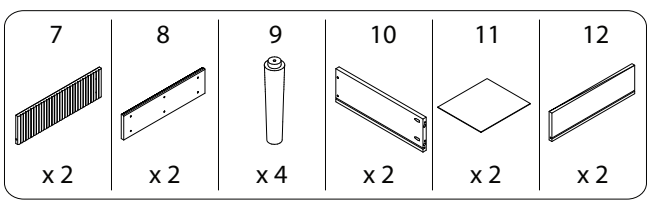
7
x 2
8
x 2
9
x 4
10
x 2
11
x 2
12
x 2

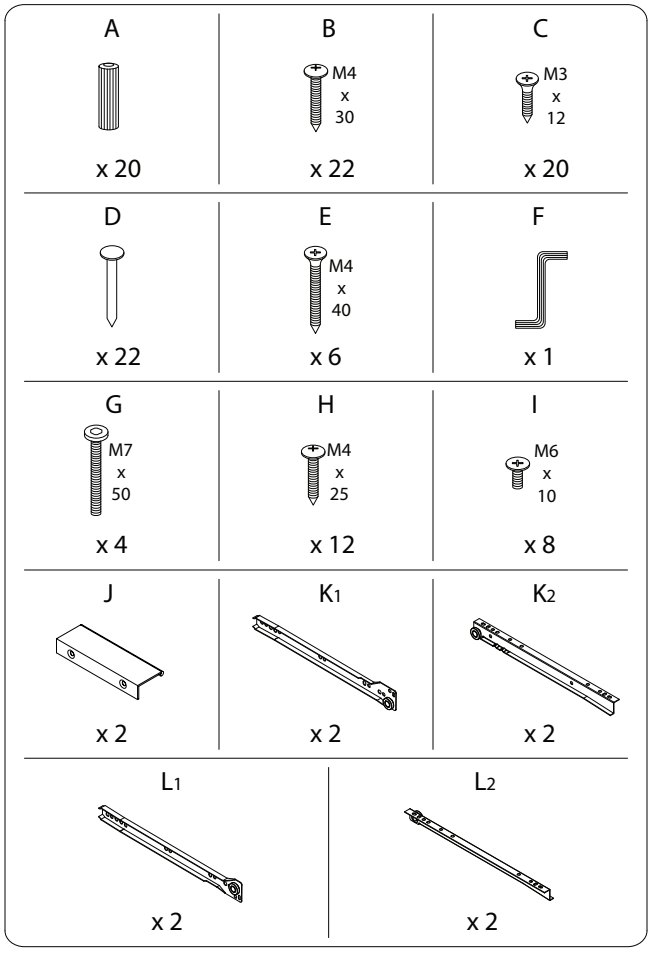
A
x 20
B
M4
x
30
x 22
C
M3
x
12
x 20
D
x 22
E
M4
x
40
x 6
F
x 1
G
M7
x
50
x 4
H
M4
x
25
x 12
I
M6
x
10
x 8
J
x 2
K1
x 2
K2
x 2
L1
x 2
L2
x 2

1

2	3	A
x 1	x 1	x 12

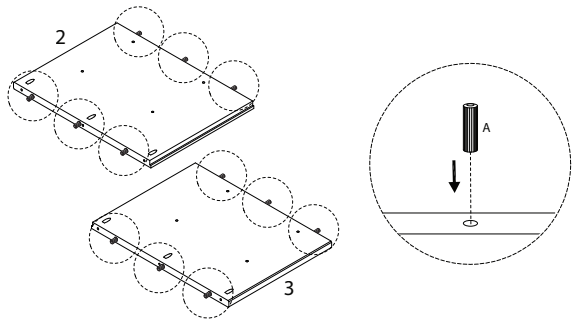

2 x 2

6	10	A
x 1	x 1	x 4

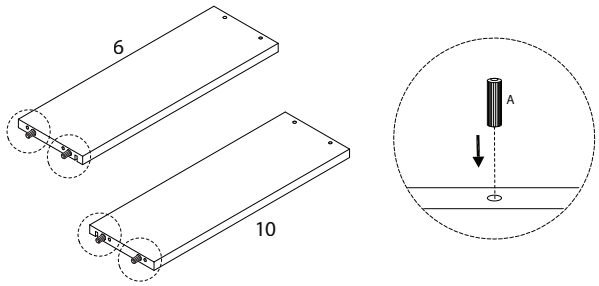

3

K1	L1	I
x 2	x 2	M6 x 10 x 8

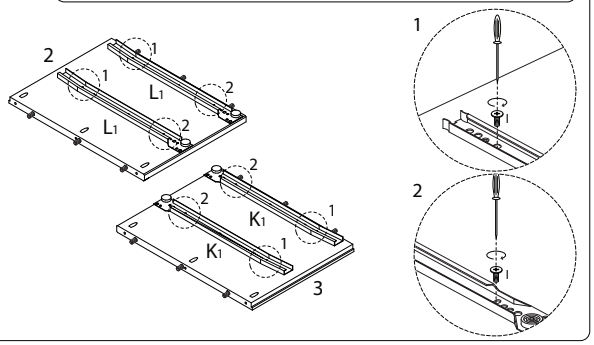

4

1	B
x 1	M4 x 30 x 6

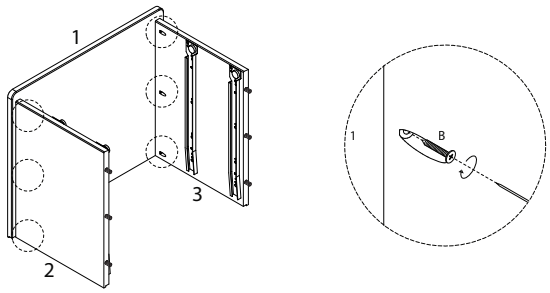

5

4	9	F	G
x 1	x 4	x 1	M7 x 50 x 4

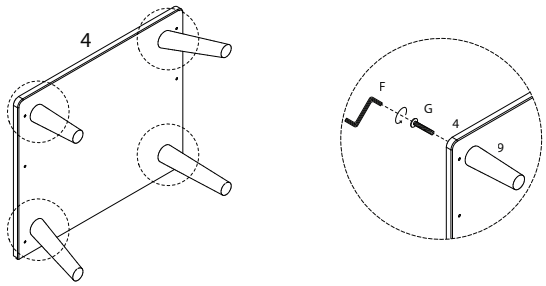

7

5	D
x 1	x 22

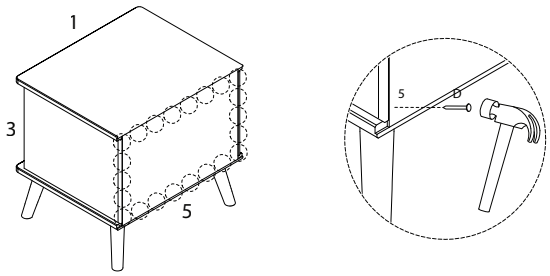

6

E
M4 x 40 x 6

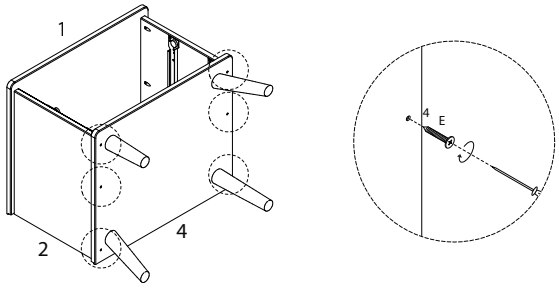

8 x 2

7	B
x 1	M4 x 30 x 4

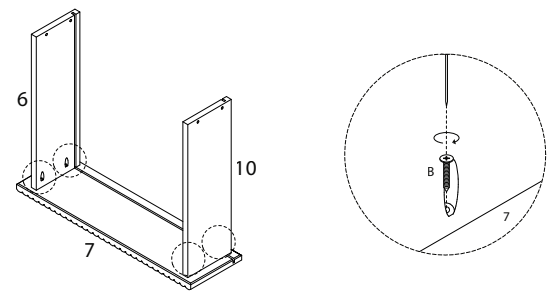

9 x 2



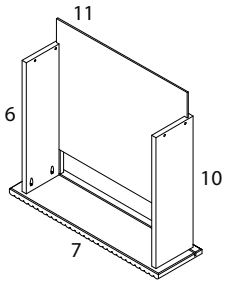

11 x 2

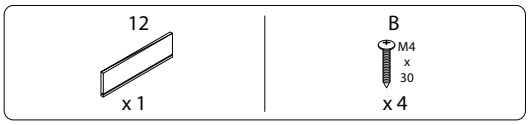

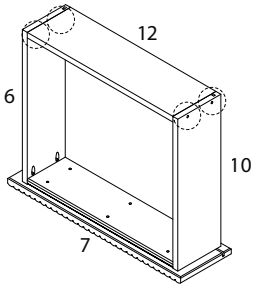

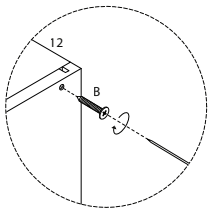

10 x 2

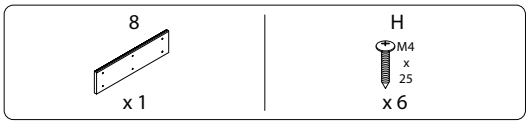

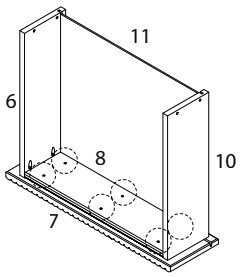

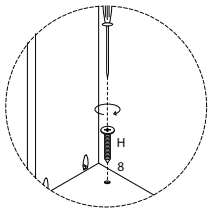

12 x 2

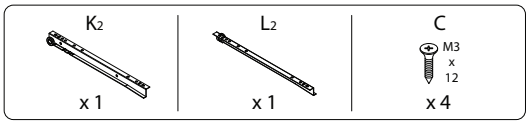

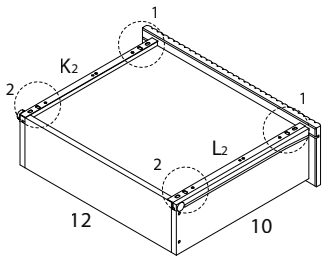

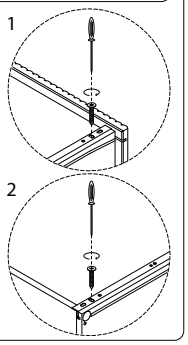

13 x 2

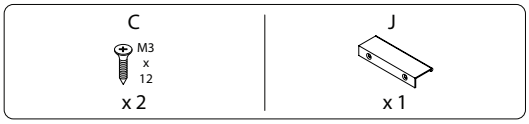

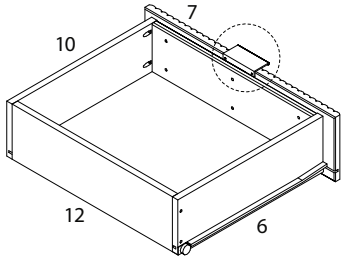

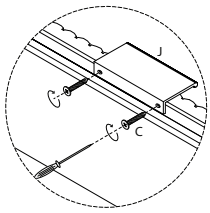

14

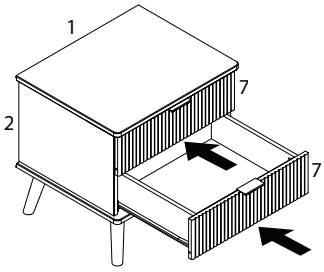

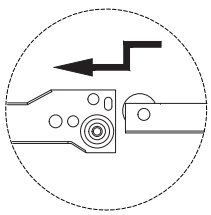

15

