QUESNEL

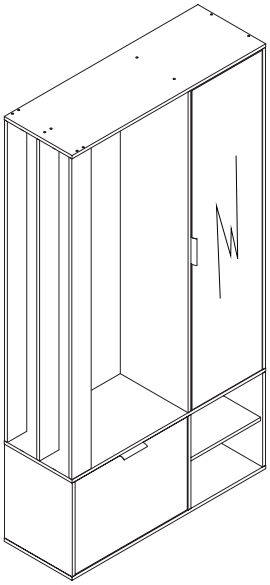

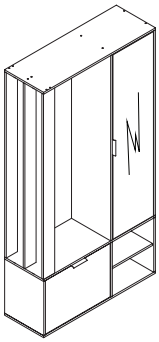

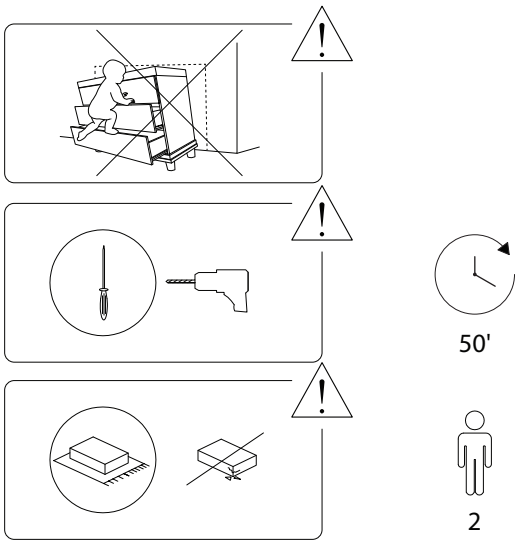

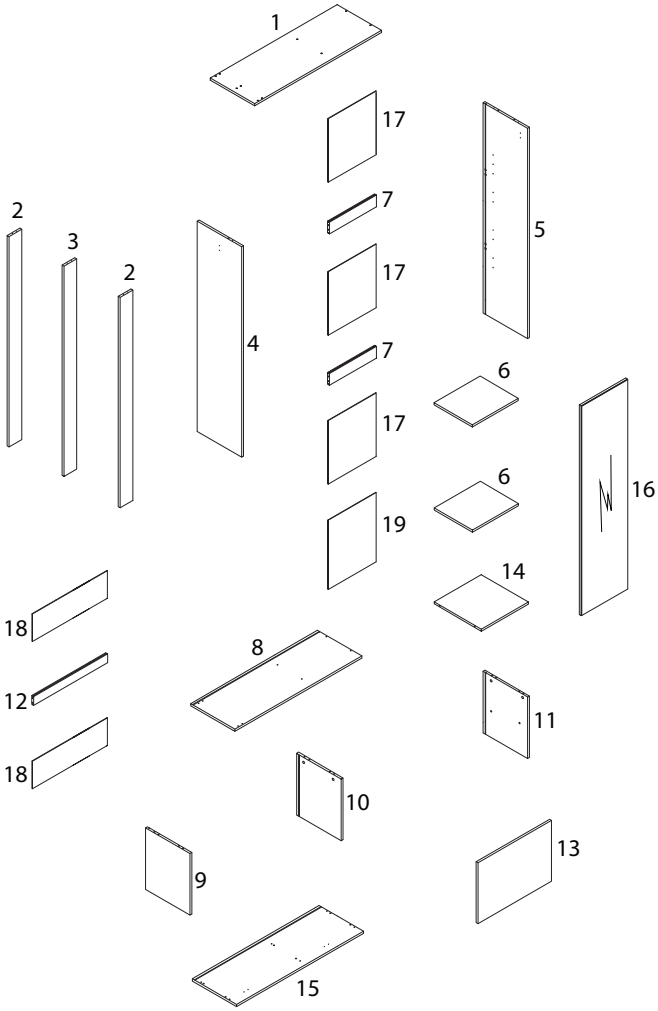

1 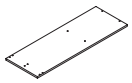 x 1	2 x 2	3 x 1	4 x 1
5 x 1	6 x 2	7 x 2	8 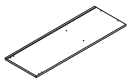 x 1
9 x 1	10 x 1	11 x 1	12 x 1
13 x 1	14 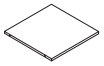 x 1	15 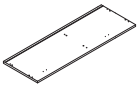 x 1	16 x 1
17 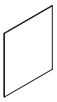 x 3	18 x 2	19 x 1	

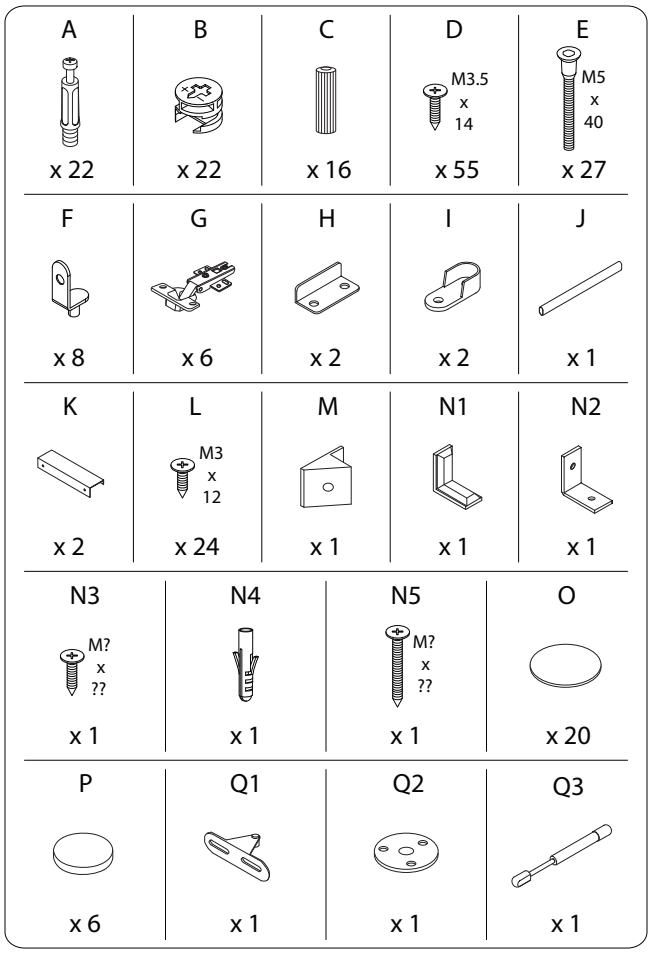
A
x 22
B
x 22
C
x 16
D
M3.5
x
14
x 55
E
M5
x
40
x 27
F
x 8
G
x 6
H
x 2
I
x 2
J
x 1
K
x 2
L
M3
x
12
x 24
M
x 1
N1
x 1
N2
x 1
N3
M?
x
??
x 1
N4
x 1
N5
M?
x
??
x 1
O
x 20
P
x 6
Q1
x 1
Q2
x 1
Q3
x 1

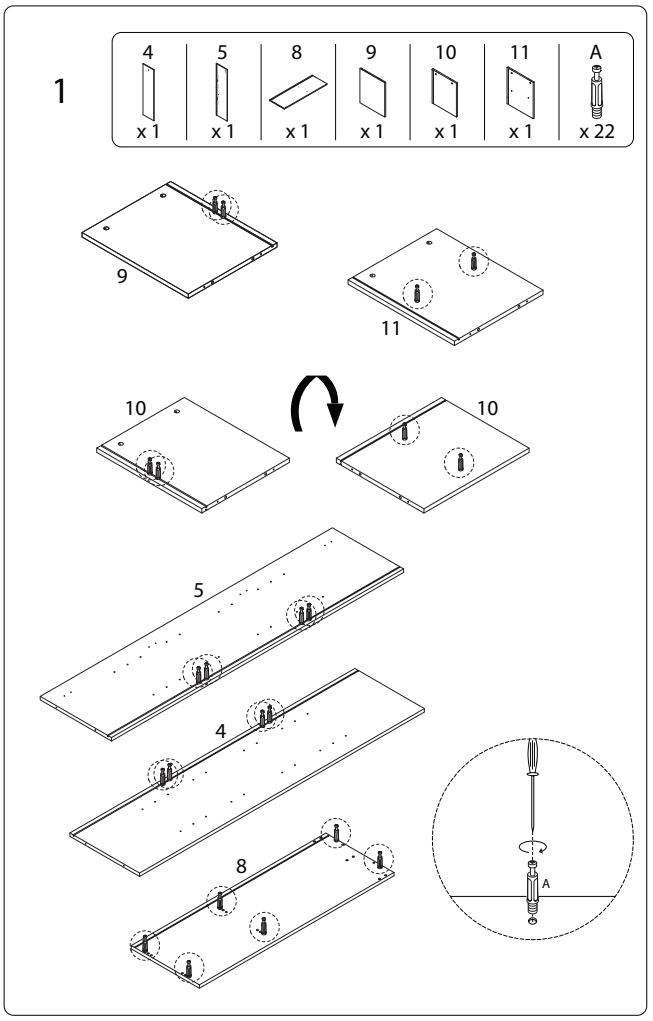
1
4
x 1
5
x 1
8
x 1
9
x 1
10
x 1
11
x 1
A
x 22
9
11
10
10
5
4
8
A

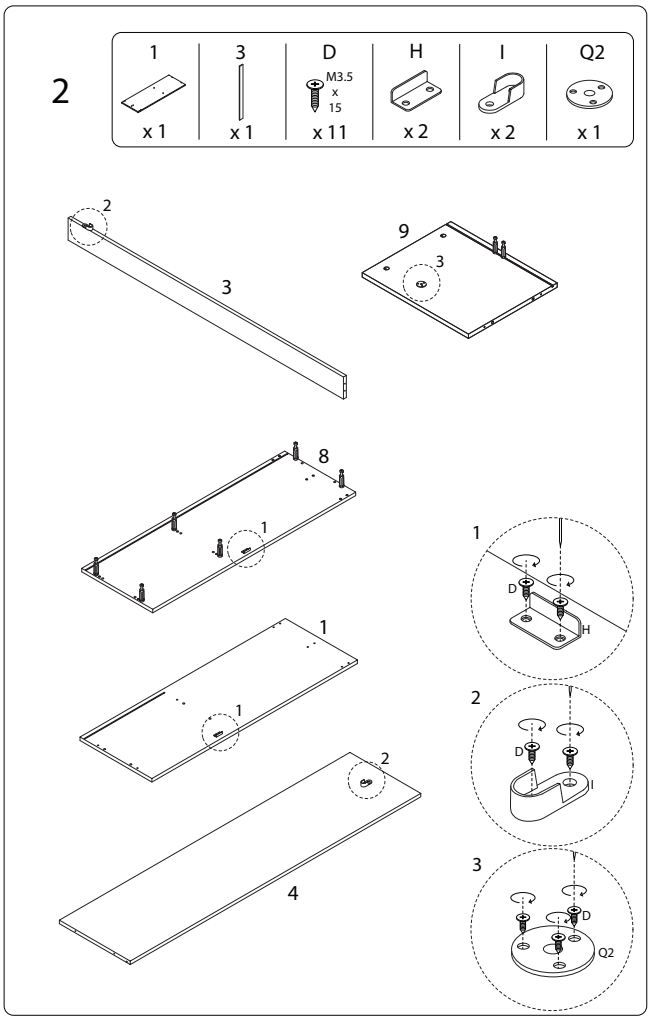
2
1
x 1
3
x 1
D
M3.5
x
15
x 11
H
x 2
I
x 2
Q2
x 1
2
3
9
3
8
1
1
1
1
2
4
1
D
H
2
D
I
3
D
Q2

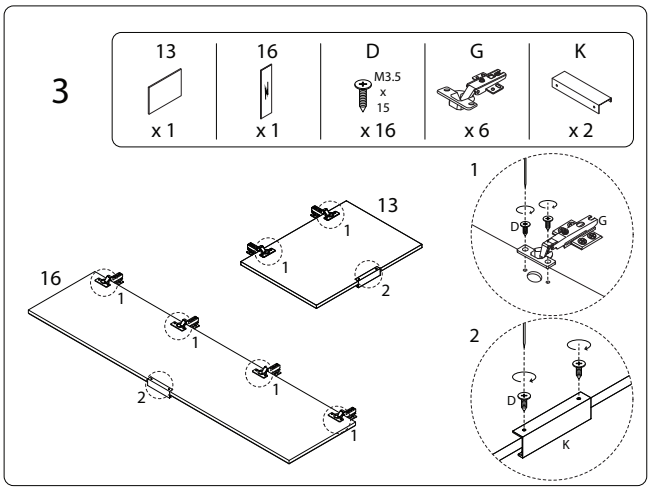
3
13
x 1
16
x 1
D
M3.5
x
15
x 16
G
x 6
K
x 2
16
1
1
1
2
1
13
1
1
2
1
D
G
2
D
K

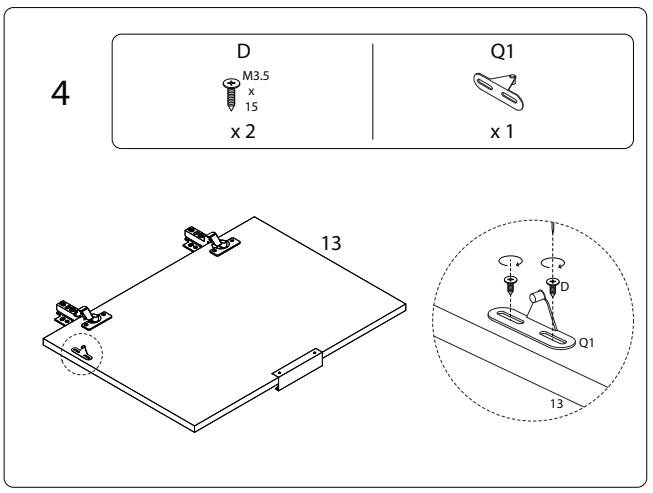
4
D
M3.5
x
15
x 2
Q1
x 1
13
D
Q1
13

5

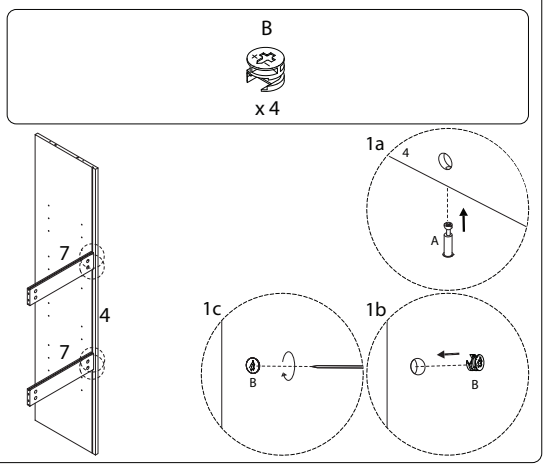

7

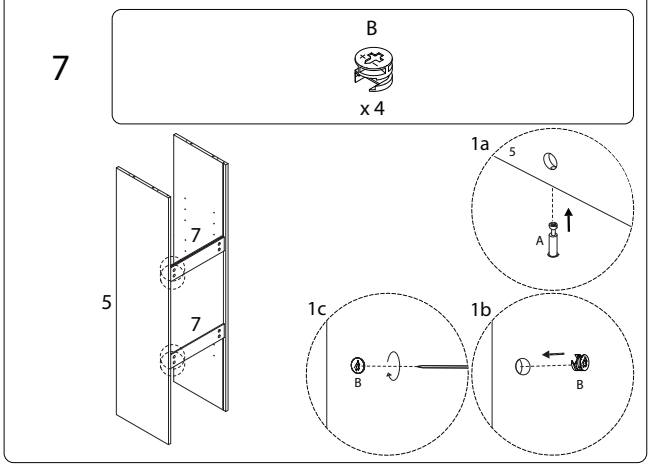

6

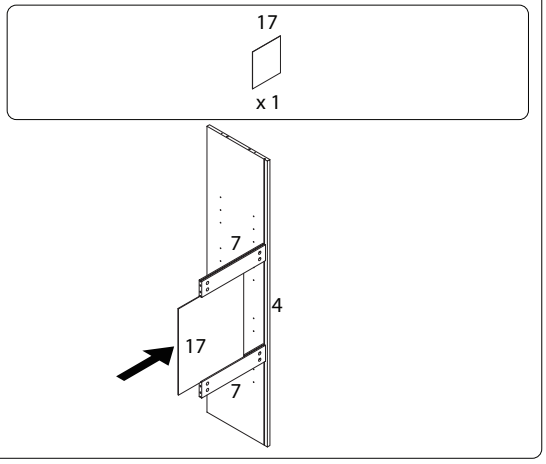

8

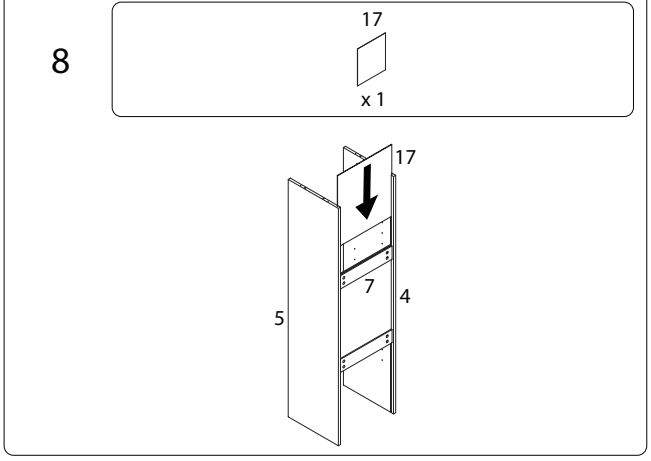

2754/QUESNEL/270526/

2754/QUESNEL/270526/

9

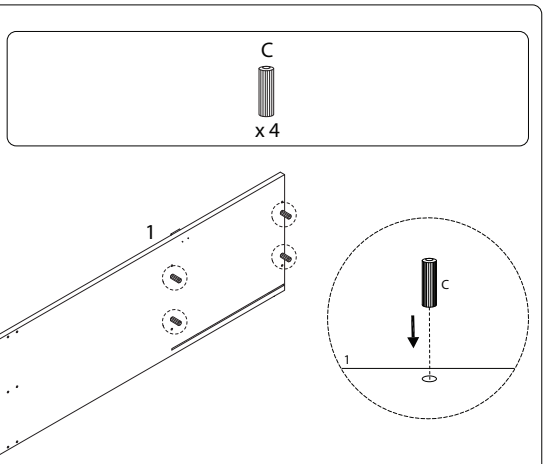

11

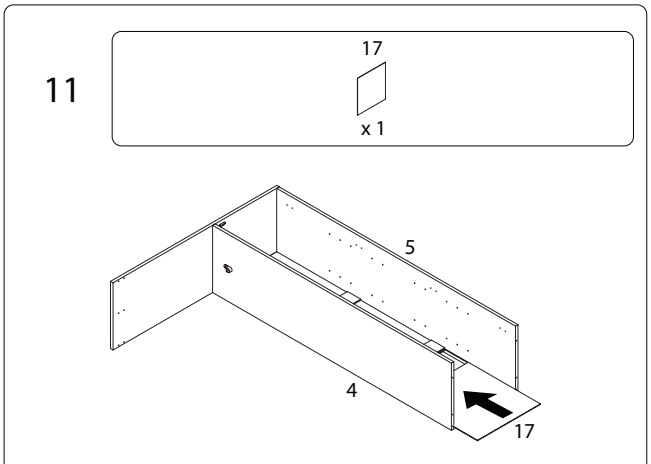

10

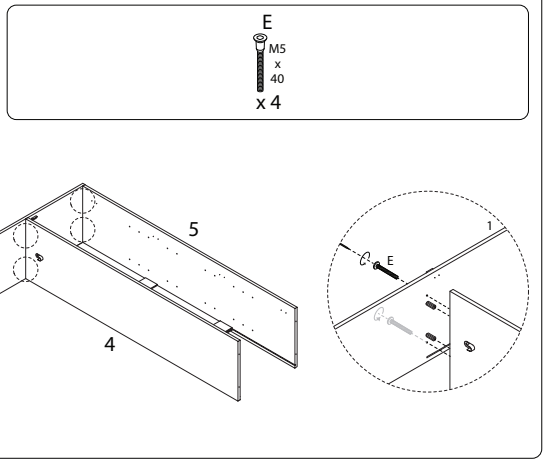

12

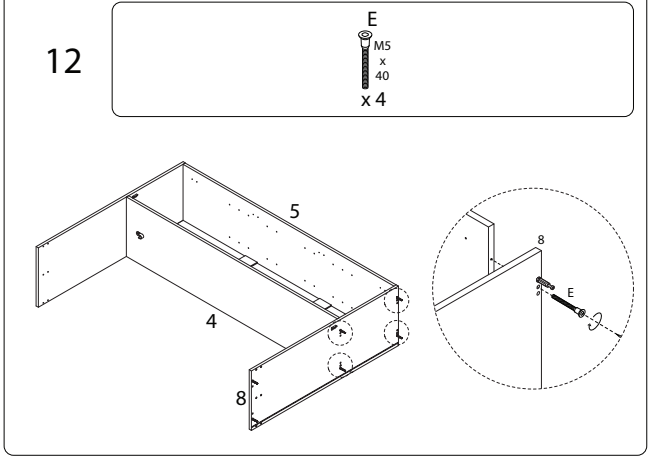

2754/QUESNEL/270526/

2754/QUESNEL/270526/

13

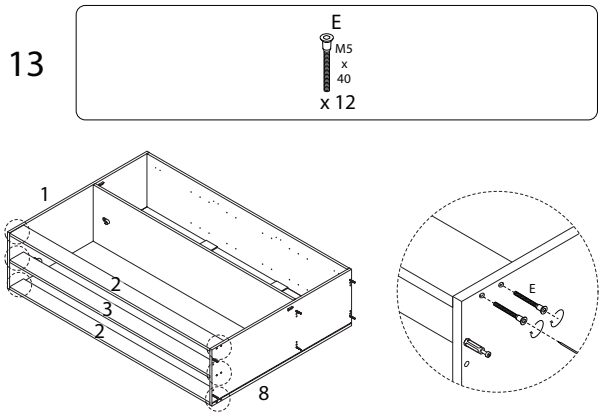

14

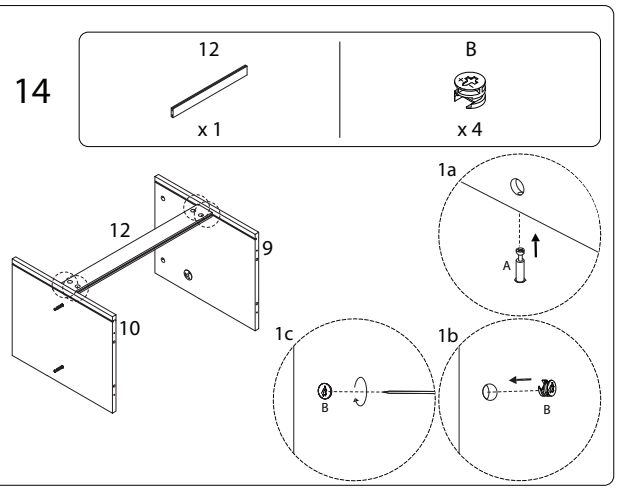

15

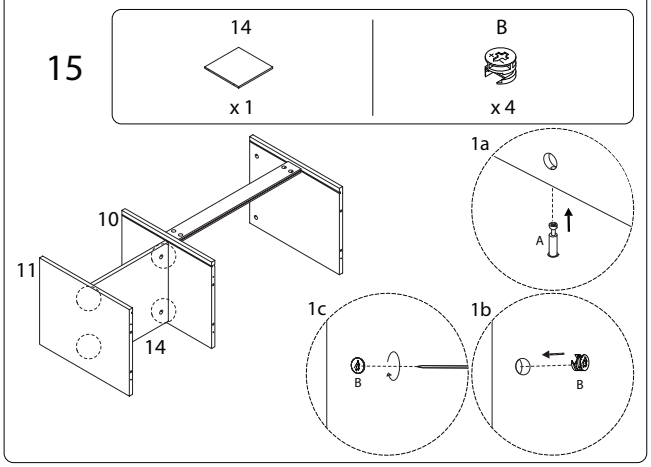

16

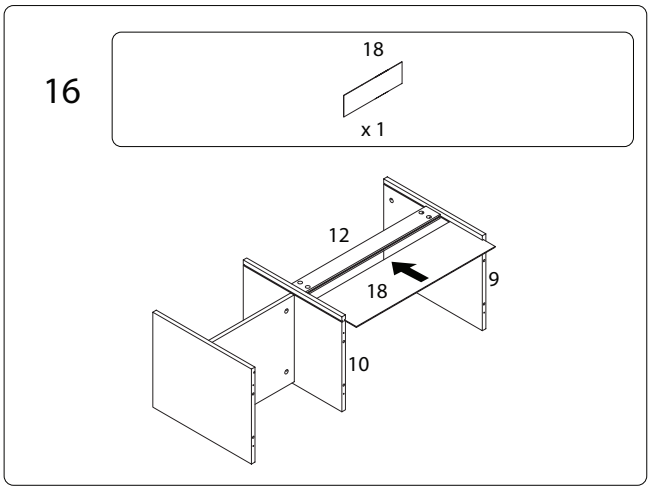

17

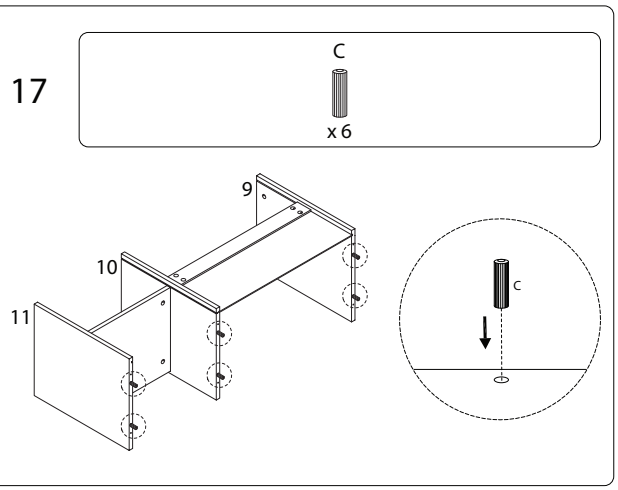

18

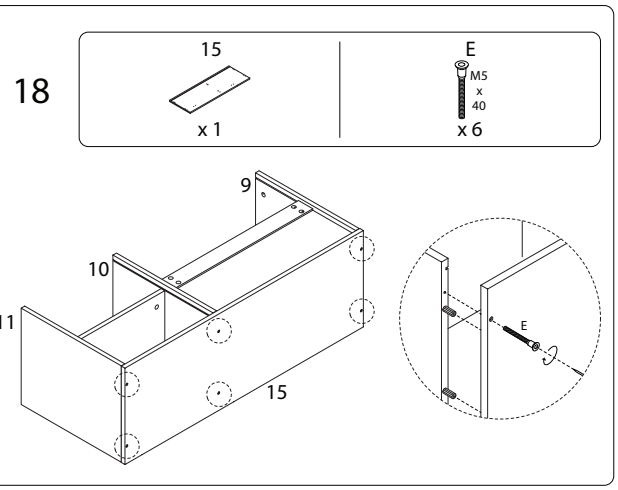

19

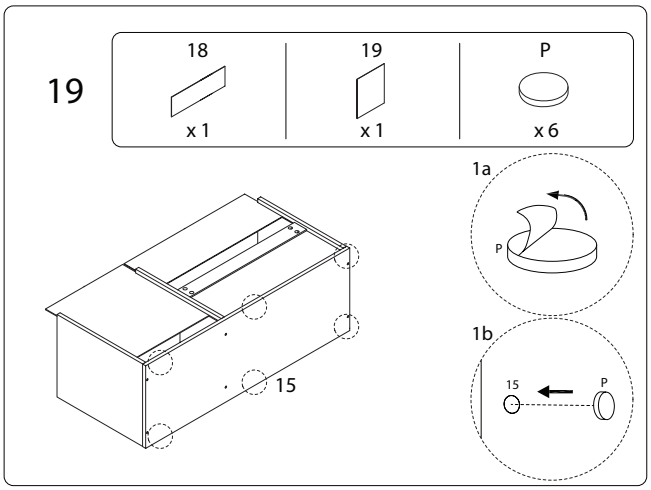

20

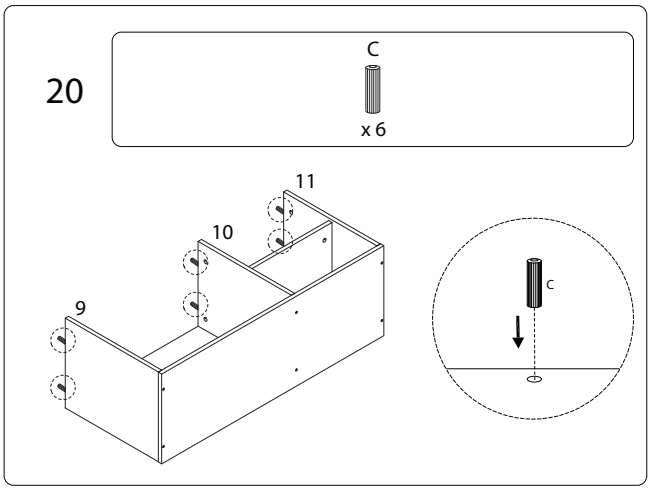

21

B

x 6

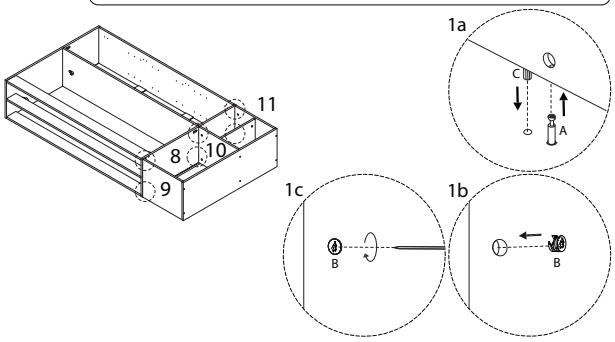

22

D

M3.5 x 14

x 24

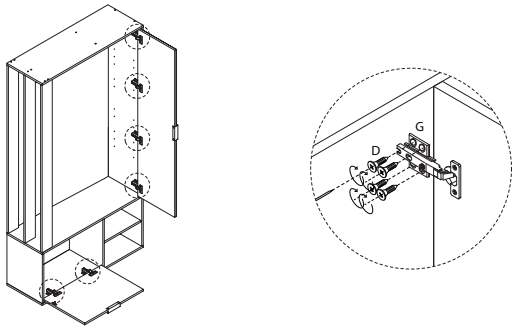

23

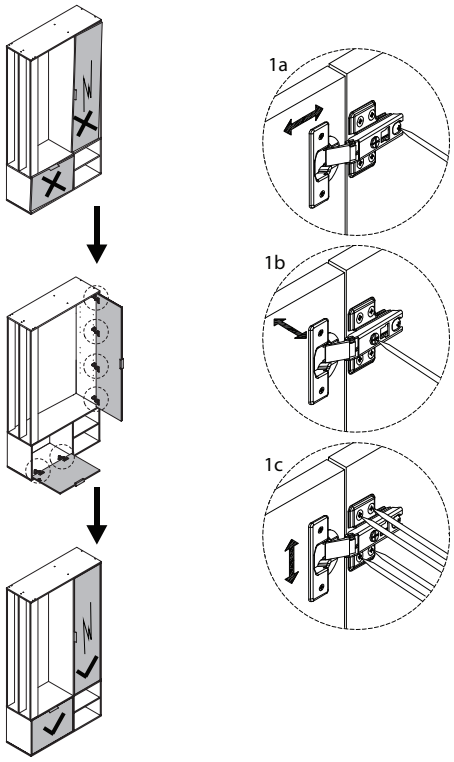

24

Q3

x 1

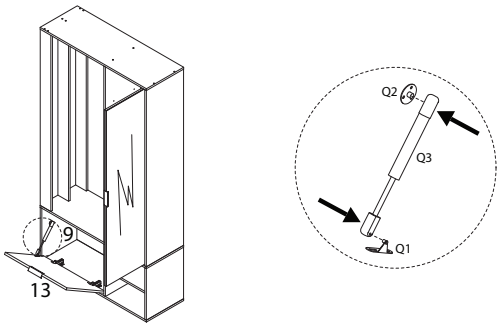

25

J

x 1

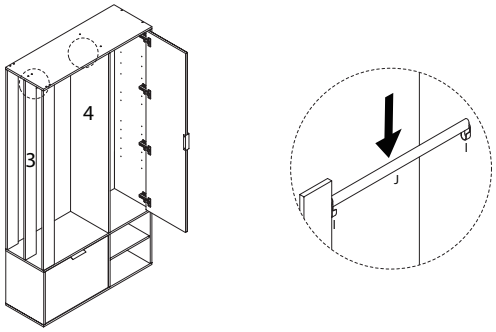

26

F

x 8

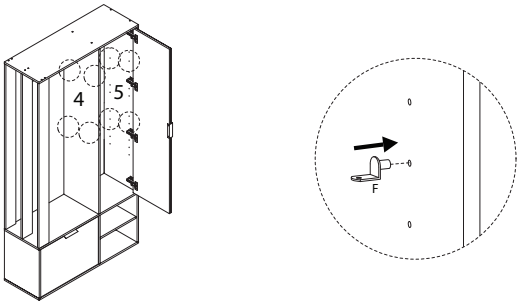

27

6

x 2

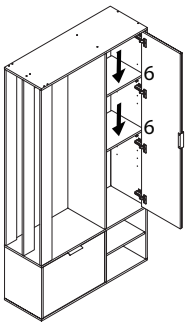

28

L	M
M3 x 12	
x 24	x 24

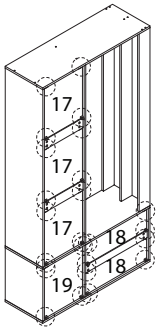

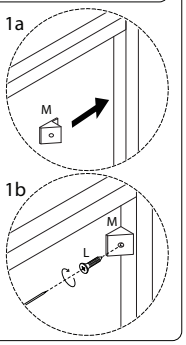

29

O
x 20

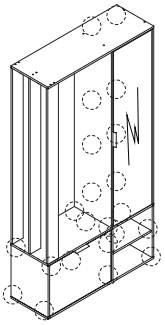

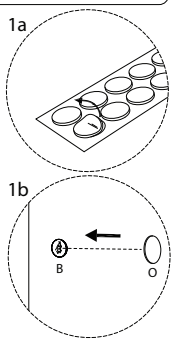

30
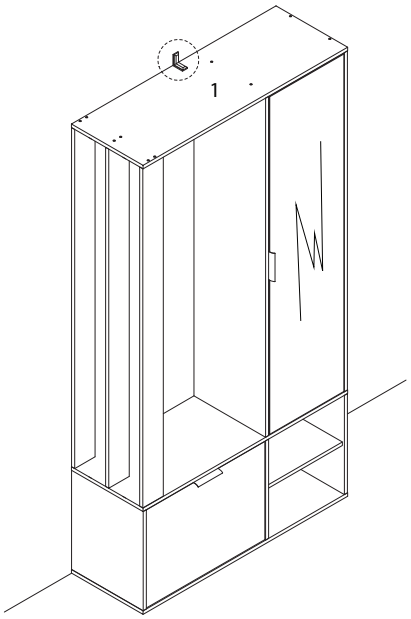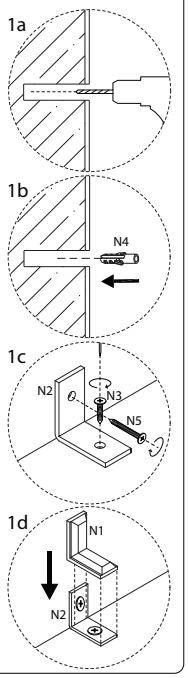
N1	N2	N3	N4	N5
		M? x ??		M? x ??
x 1	x 1	x 1	x 1	x 1