COSSAYE



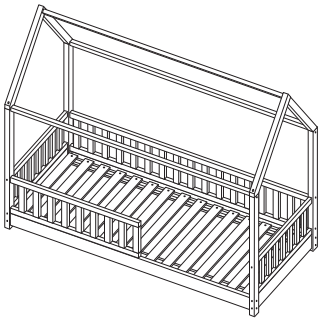

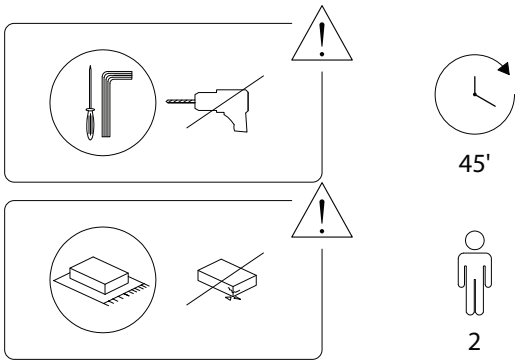

1/15

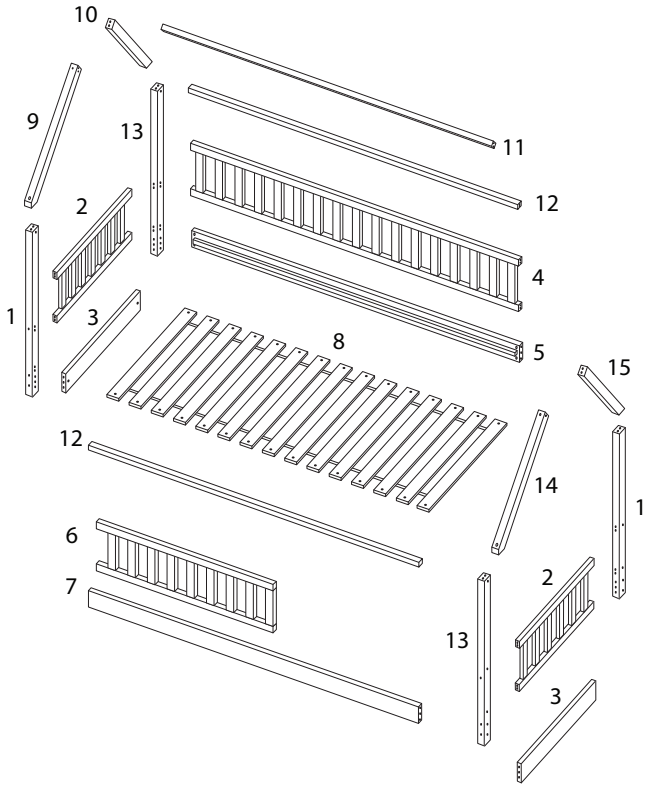

1 x 2	2 x 2	3 x 2
4 x 1	5 x 1	6 x 1
7 x 1	8 x 1	9 x 1
10 x 1	11 x 1	12 x 2
13 x 2	14 x 1	15 x 1

2291/COSSAYE/220725/

2291/COSSAYE/220725/

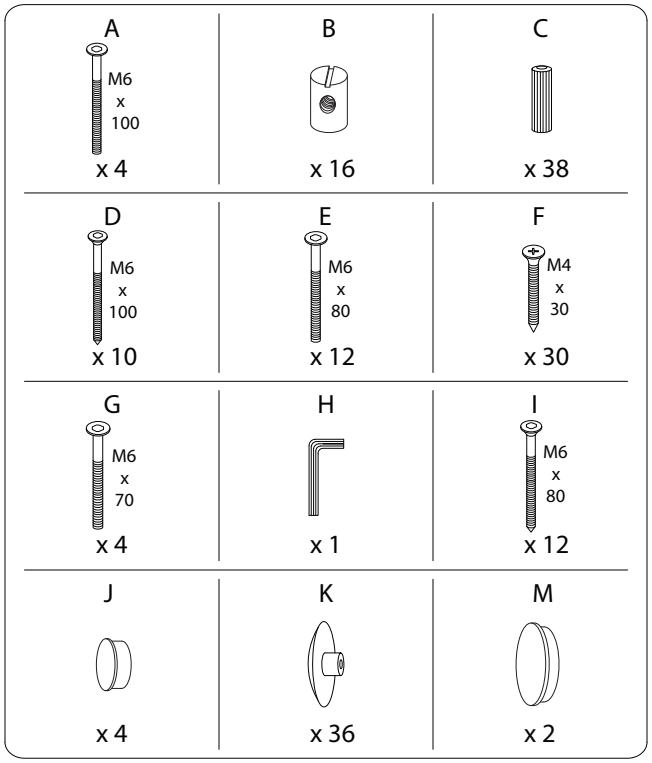
A
M6 x 100
x 4
B
x 16
C
x 38
D
M6 x 100
x 10
E
M6 x 80
x 12
F
M4 x 30
x 30
G
M6 x 70
x 4
H
x 1
I
M6 x 80
x 12
J
x 4
K
x 36
M
x 2

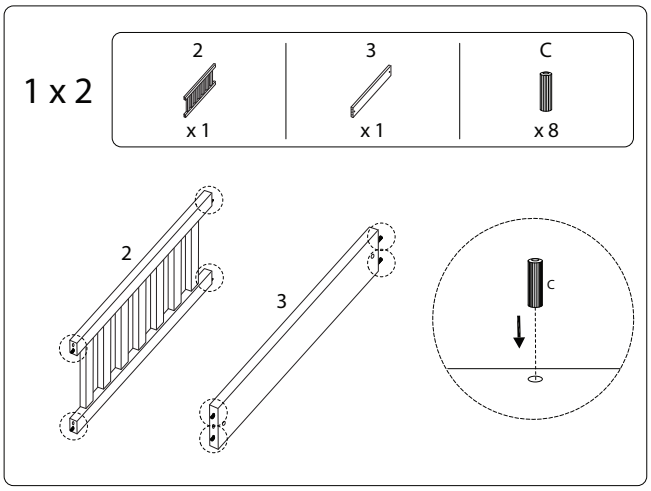
1 x 2
2
x 1
3
x 1
C
x 8
2
3
C

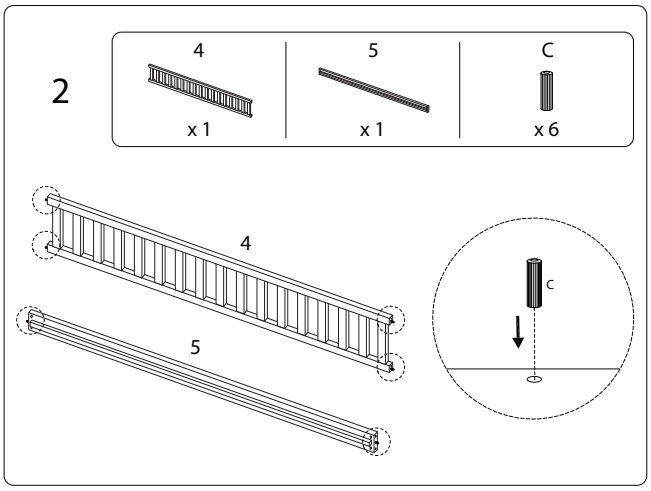
2
4
x 1
5
x 1
C
x 6
4
5
C

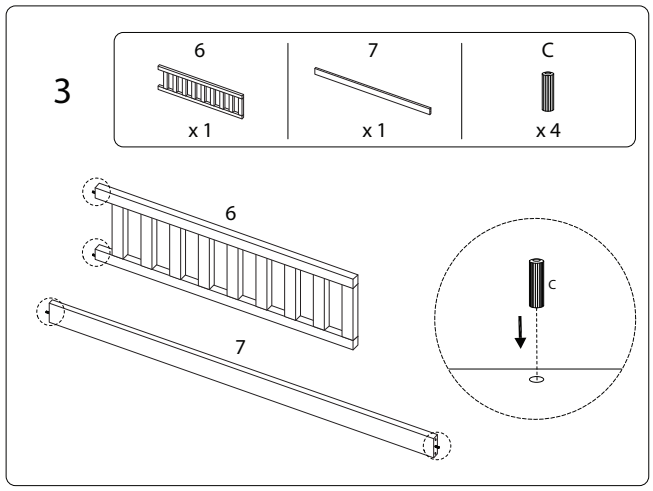
3
6
x 1
7
x 1
C
x 4
6
7
C

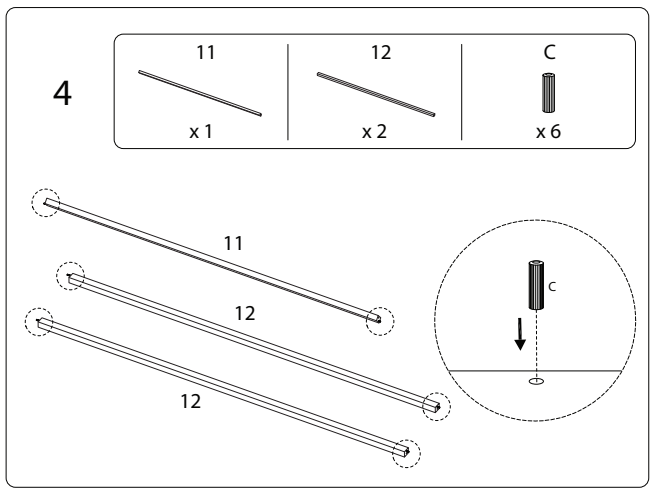
4
11
x 1
12
x 2
C
x 6
11
12
12
C

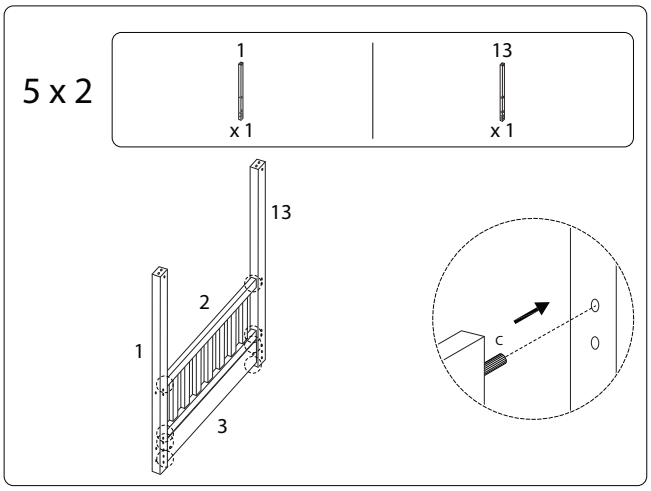
5 x 2
1
x 1
13
x 1
13
2
1
3
C

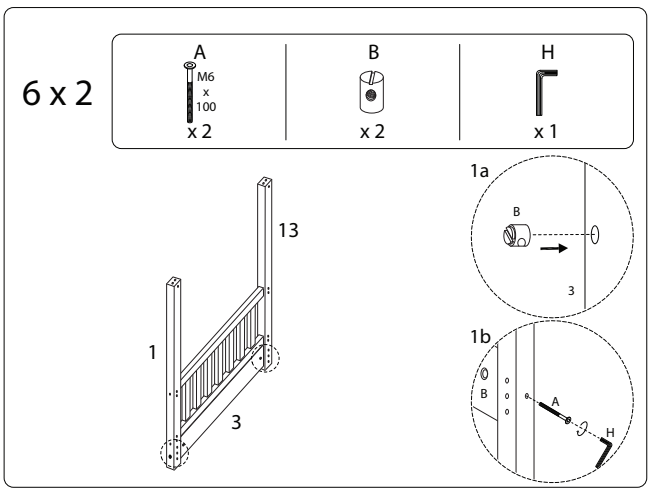
6 x 2
A
M6 x 100
x 2
B
x 2
H
x 1
13
1
3
1a
B
3
1b
B
A
H

7 x 2

D
M6 x 100
x 4

H
x 1

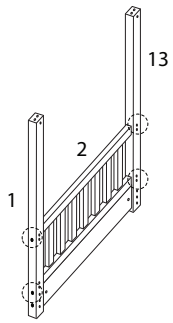

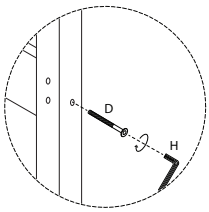

8 x 2

C
x 2

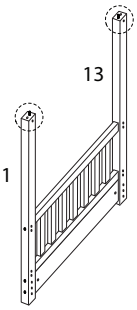

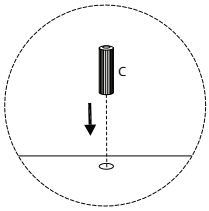

8/15

9

G
M6 x 70
x 2

H
x 1

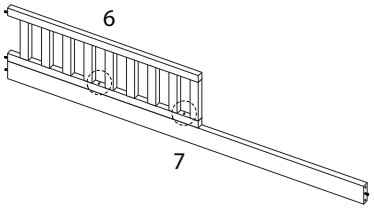

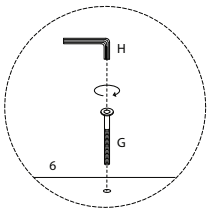

10

G
M6 x 70
x 2

H
x 1

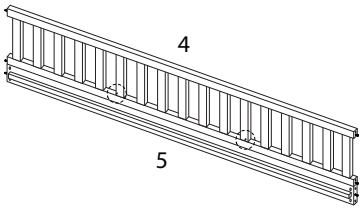

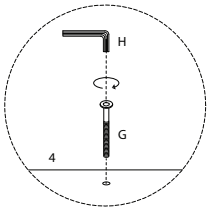

9/15

11

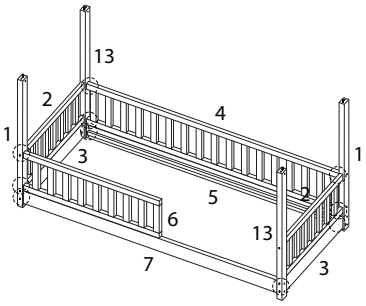

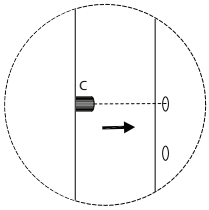

13

I
M6 x 80
x 6

H
x 1

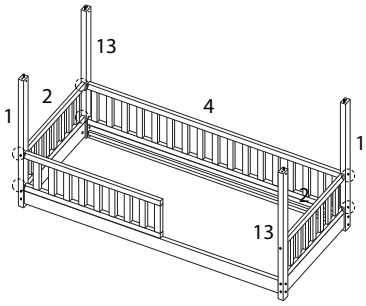

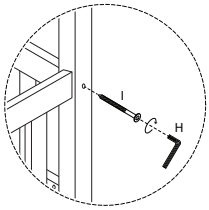

12

B
x 8

E
M6 x 80
x 8

H
x 1

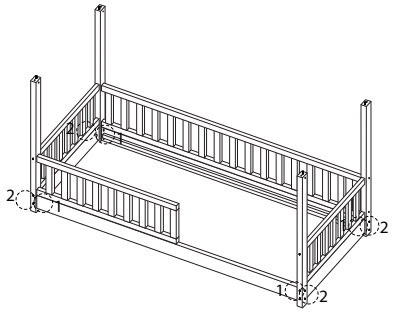

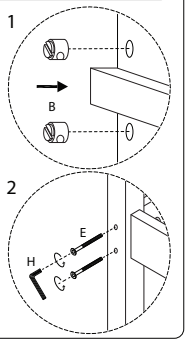

10/15

14

8
x 1

F
M4 x 30
x 30

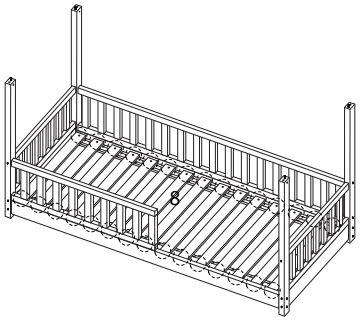

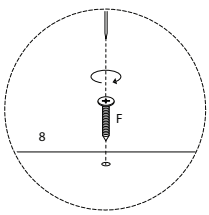

11/15

15

9	10	14	15	C	D	H
x 1	x 1	x 1	x 1	x 2	x 2	x 1

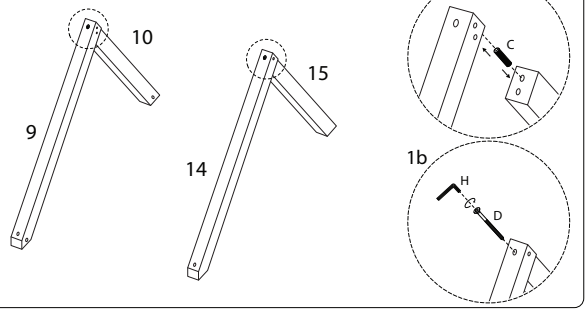

16

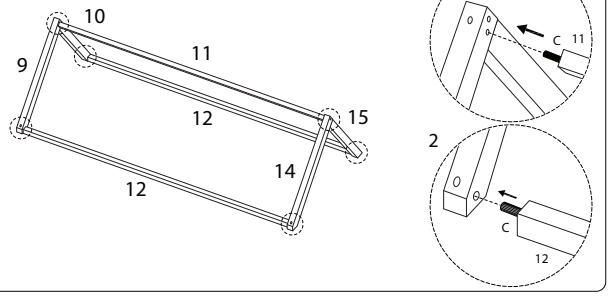

17

I	H
M6 x 80 x 2	x 1

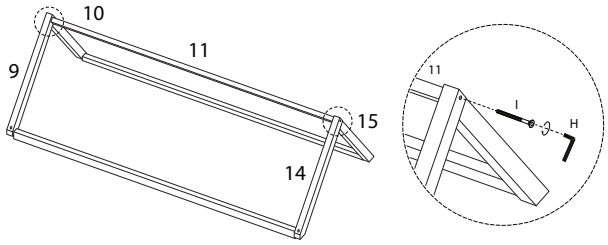

18

I	H
M6 x 80 x 4	x 1

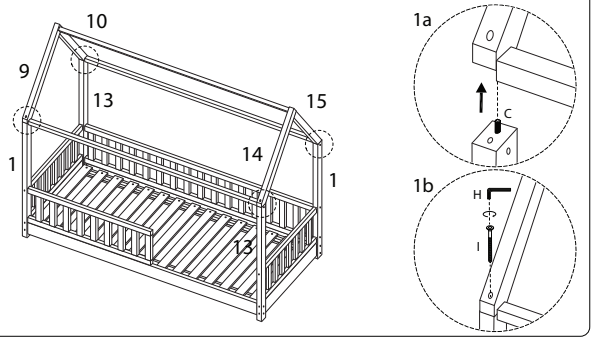

19

B	E	H
x 4	M6 x 80 x 4	x 1

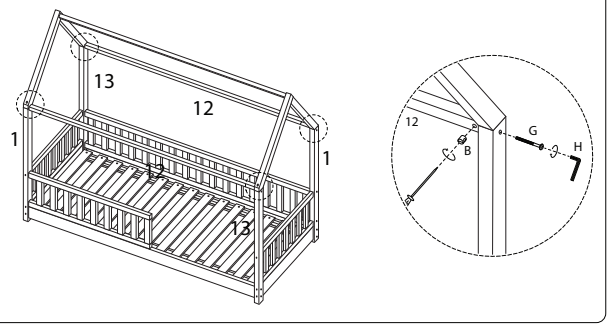

20

J	M
x 4	x 2

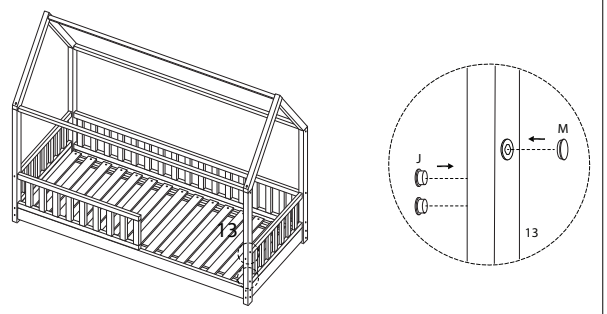

21

K
x 36

