FOXTON

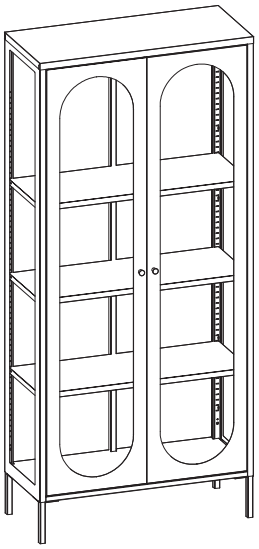

1/12

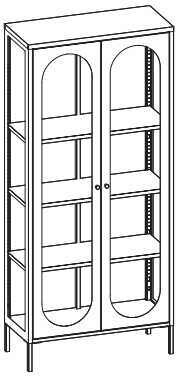

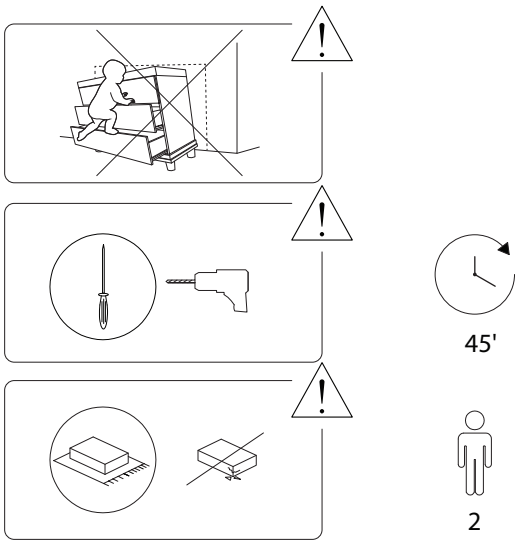

2/12

2121/FOXTON/131026/

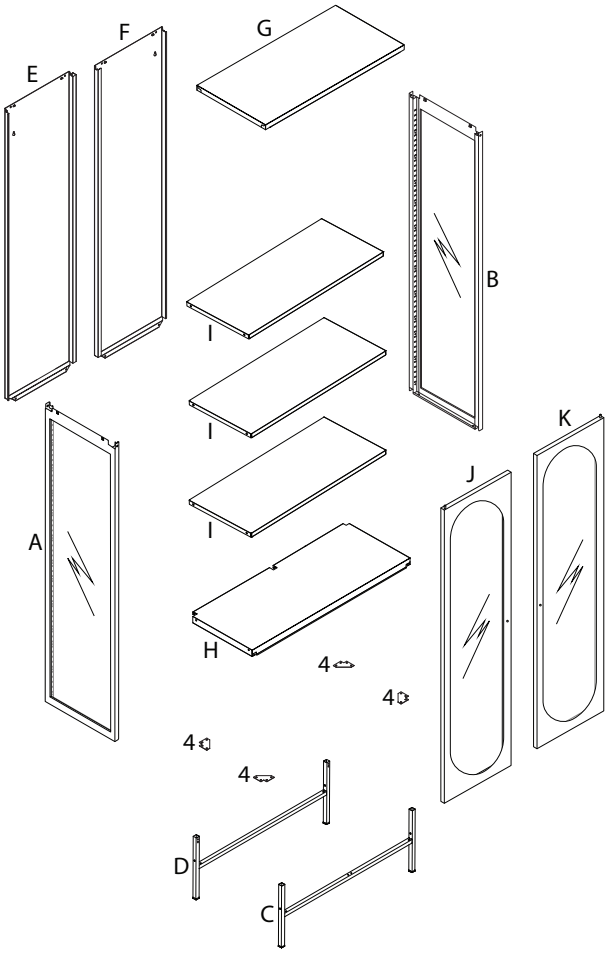

3/12

A x 1	B x 1
C x 1	D x 1
E x 1	F x 1
G x 1	H x 1
I x 3	J x 1
K x 1	

4/12

2121/FOXTON/131026/

1	2A	2B
M4 x 10		
x 20	x 2	x 2
3A	3B	3C
	M4	M4 x 22
x 2	x 2	x 2
4	5A	5B
	M4 x 35	M5
x 4	x 2	x 2
5C	6	
x 2	x 12	
7A	7B	
x 4	x 4	

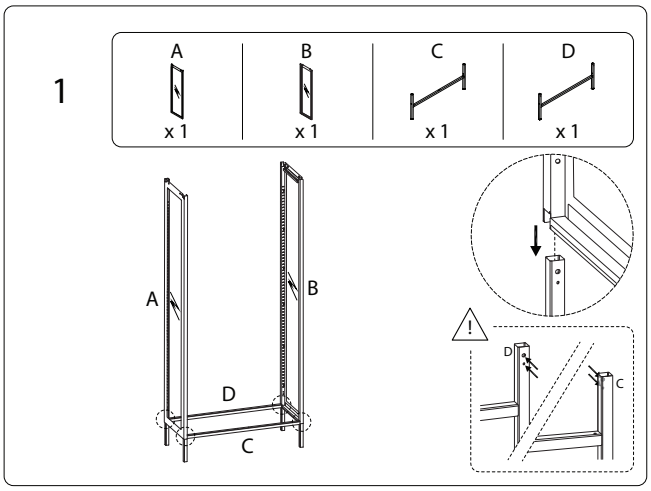

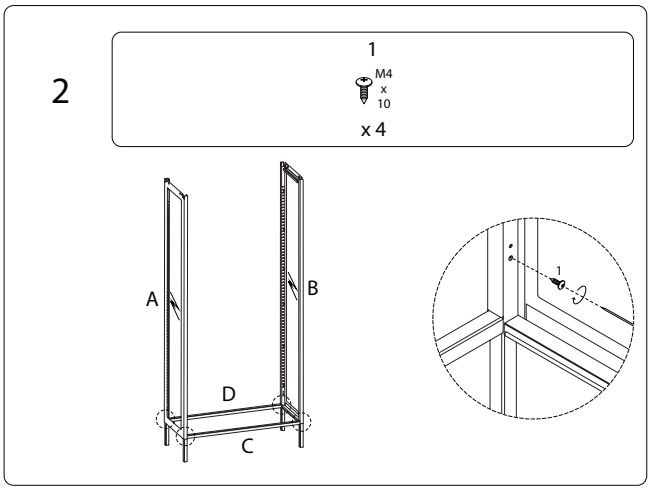

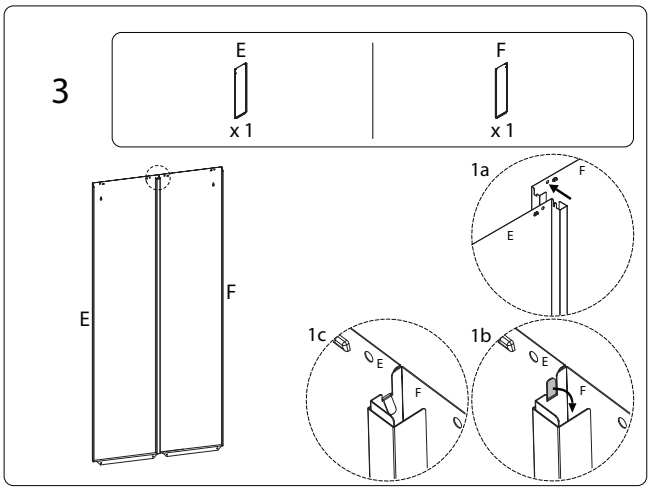

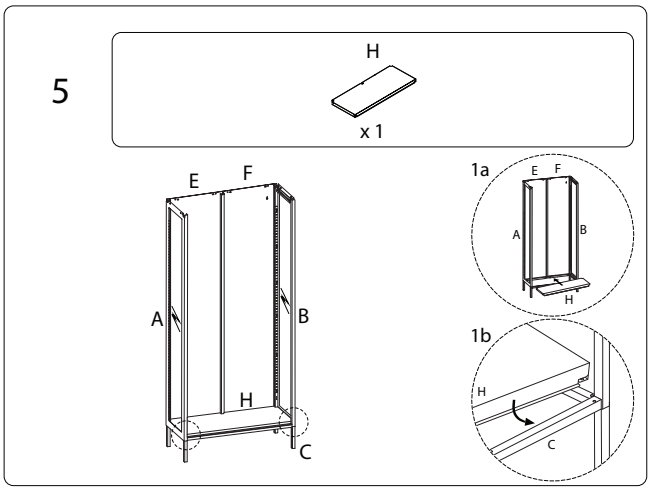

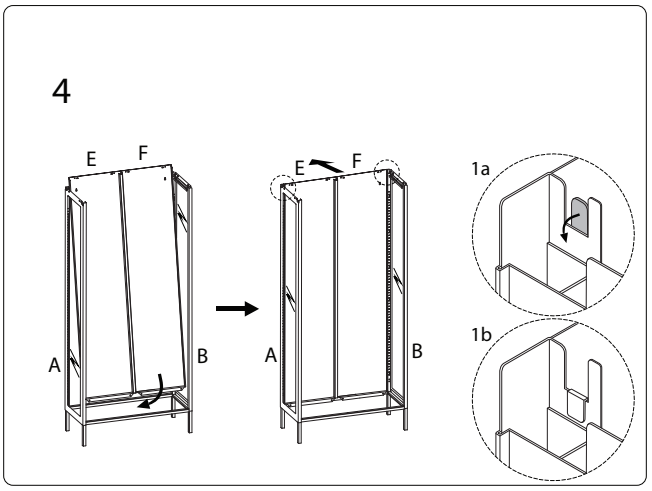

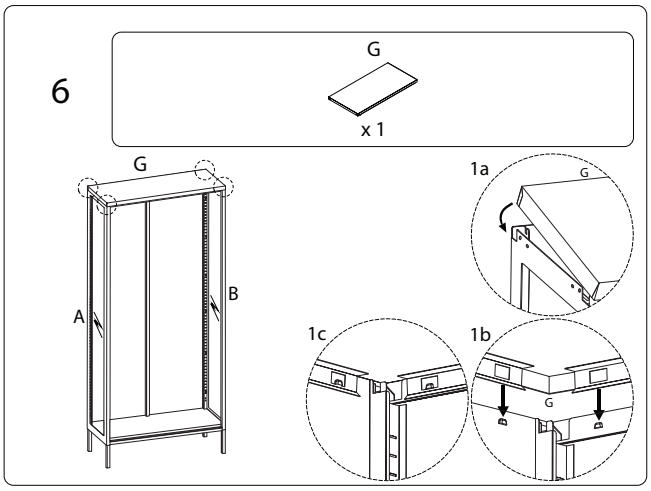

7

1 — M4 x 10 — x 16

4 — x 4

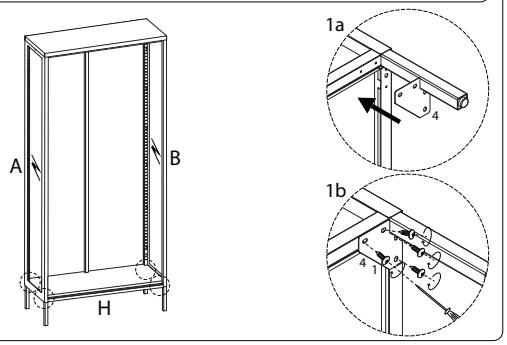

8

6 — x 12

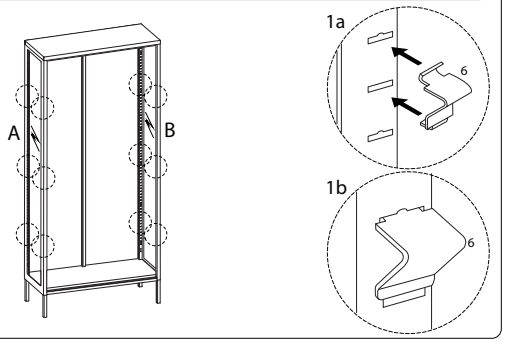

9

I — x 3

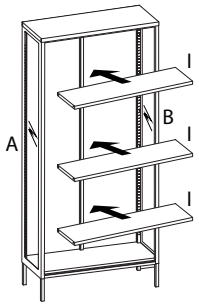

10

2A — x 2

2B — x 2

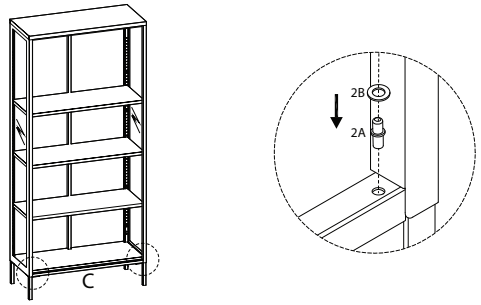

11

J — x 1

K — x 1

3A — x 2

3B — M4 — x 2

3C — M4 x 22 — x 2

7A — x 4

7B — x 4

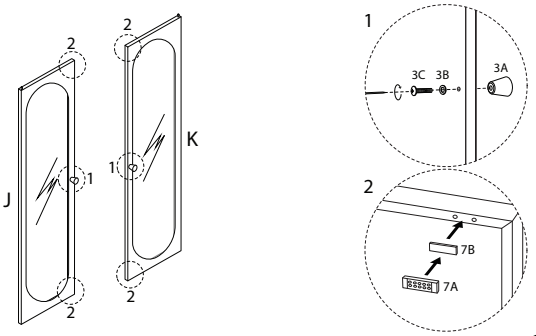

12

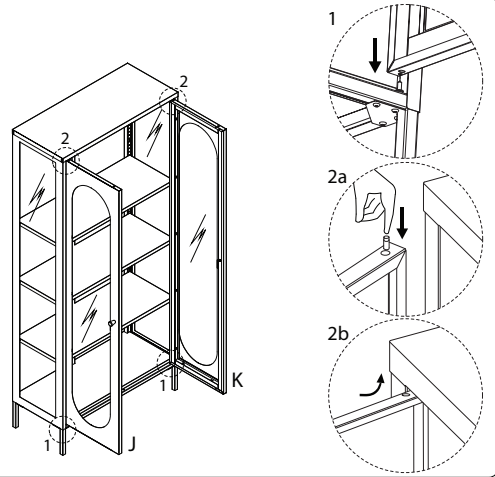

13

5A — M4 x 35 — x 2

5B — M5 — x 2

5C — x 2

