ENAGO

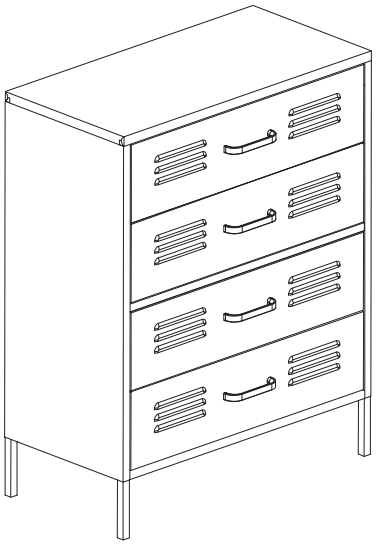

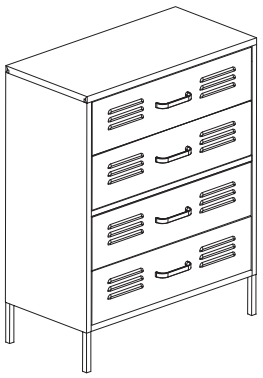

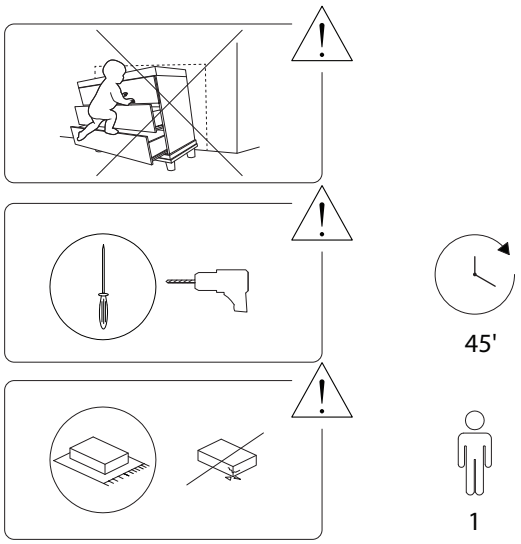

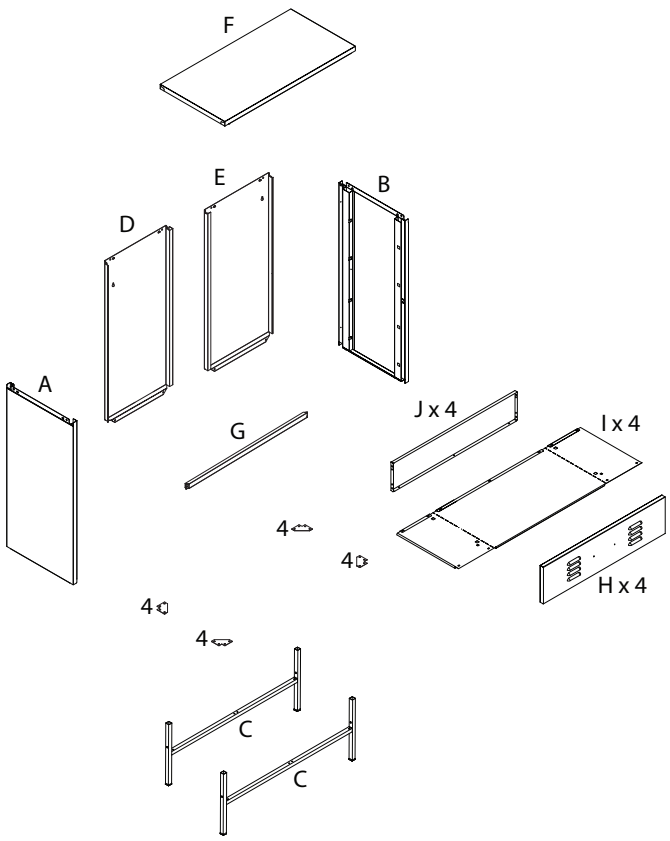

A x 1	B x 1
C x 2	D x 1
E x 1	F x 1
G x 1	H x 4
I x 4	J x 4

1 M4 x 10 x 42	2A 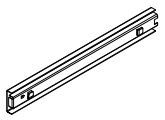 x 4
2B 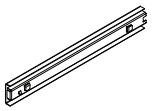 x 4	3A  x 4
3B M4  x 8	3C M4 x 6 x 8
4  x 4	5A M4 x 35 x 2
5B M5  x 2	5C  x 2

1

A x 1 | B x 1 | C x 2

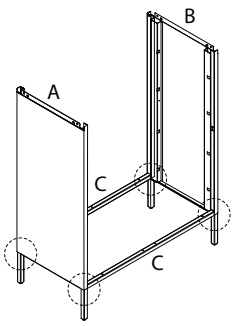

2

E x 1

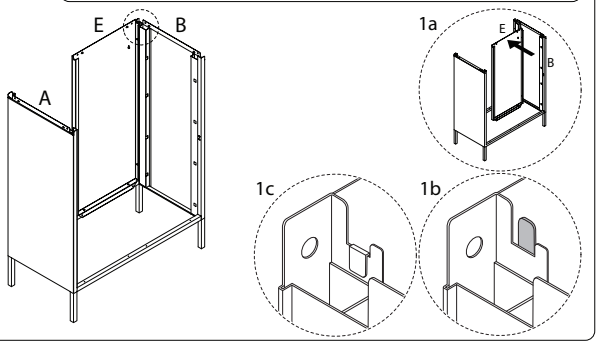

3

1 M4 x 10 x 4

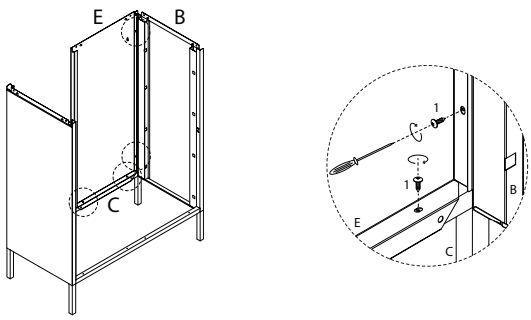

5

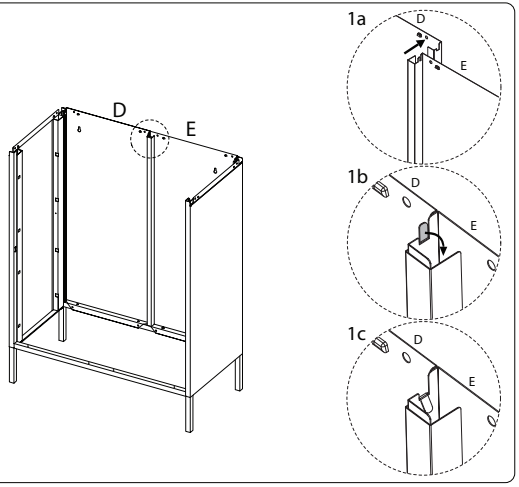

4

D x 1

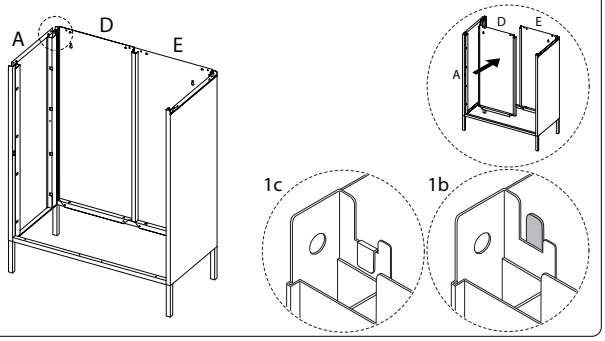

6

1 M4 x 10 x 4

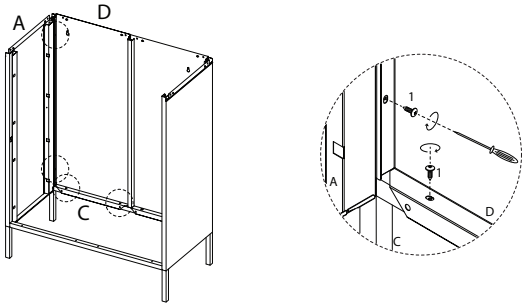

7

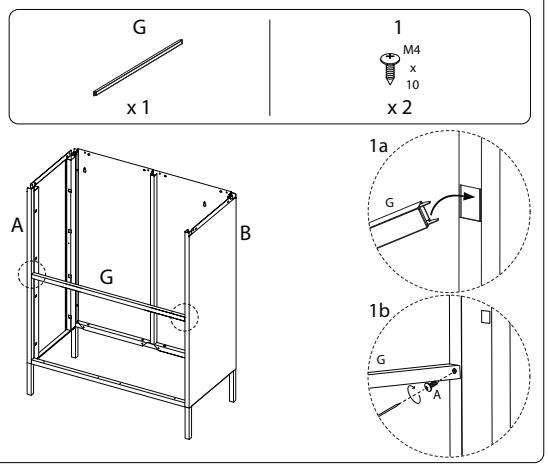

8

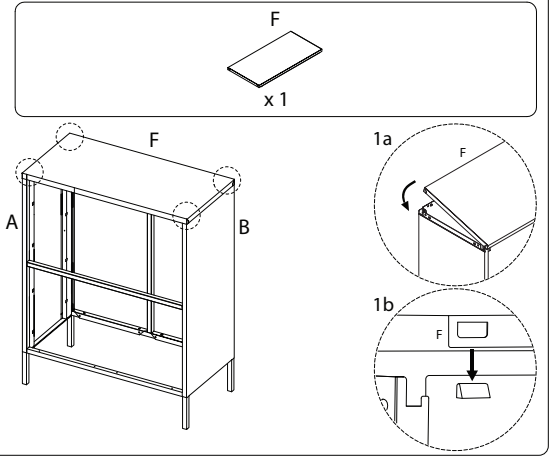

9

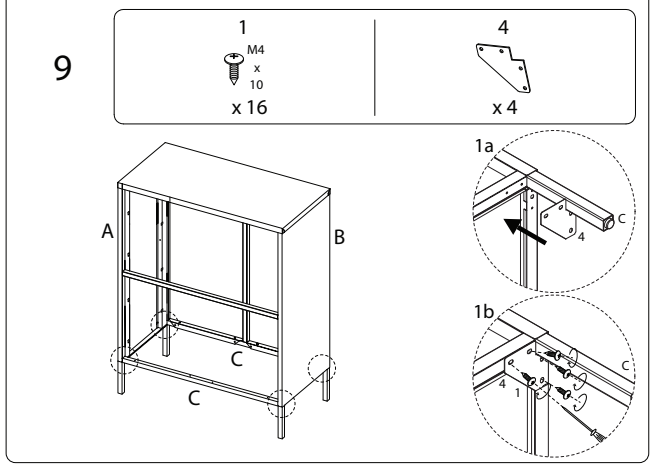

10 x 4

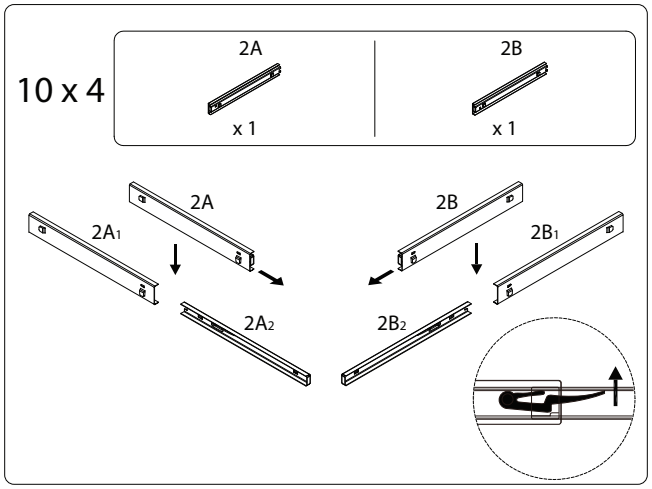

11

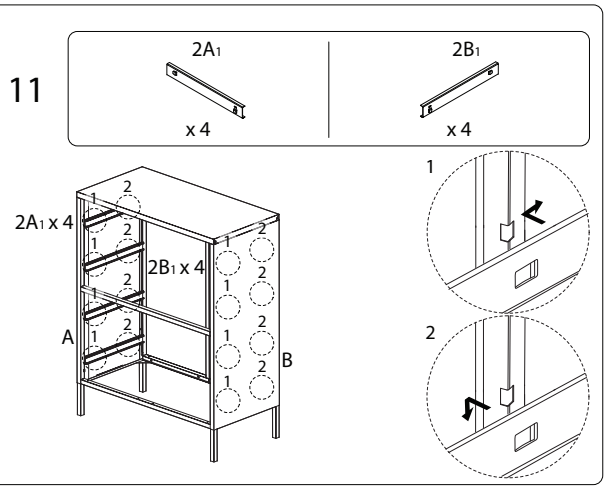

12

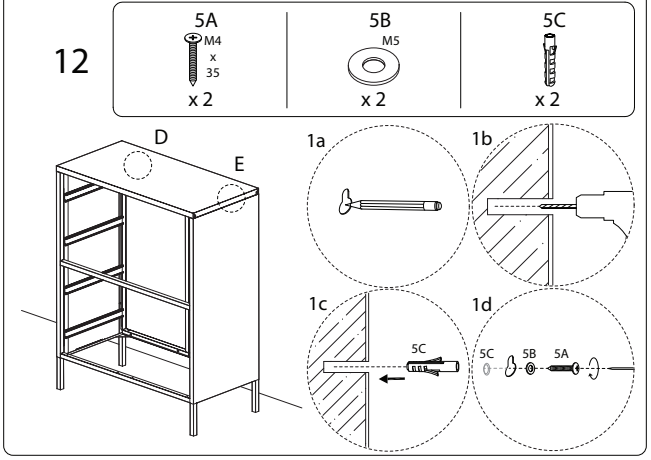

13 x 4

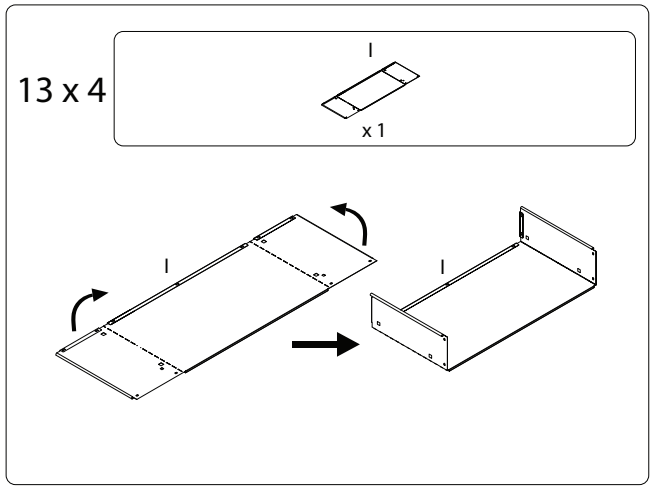

14 x 4

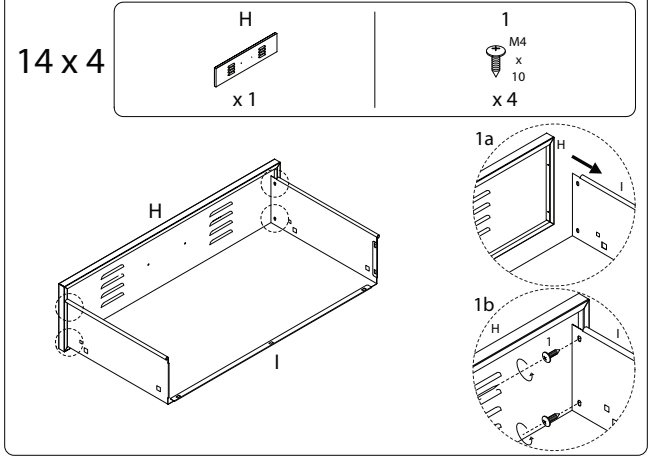

15 x 4

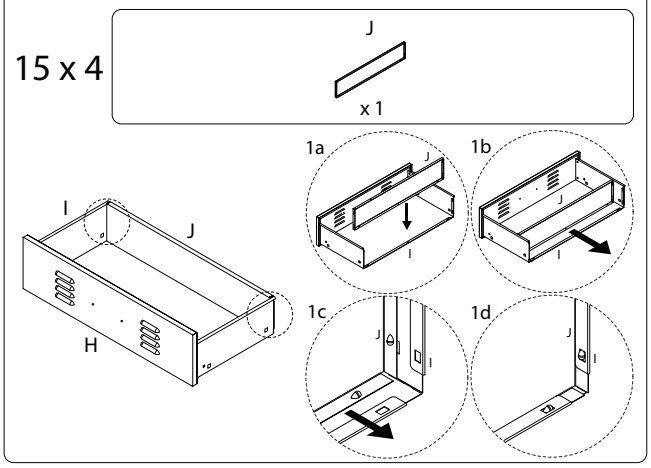

17 x 4

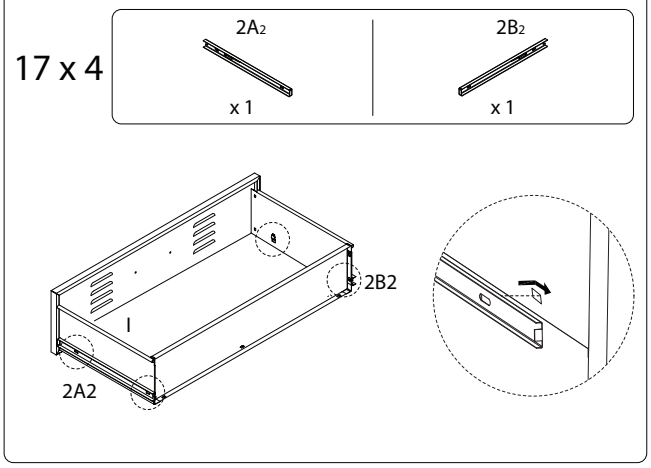

16 x 4

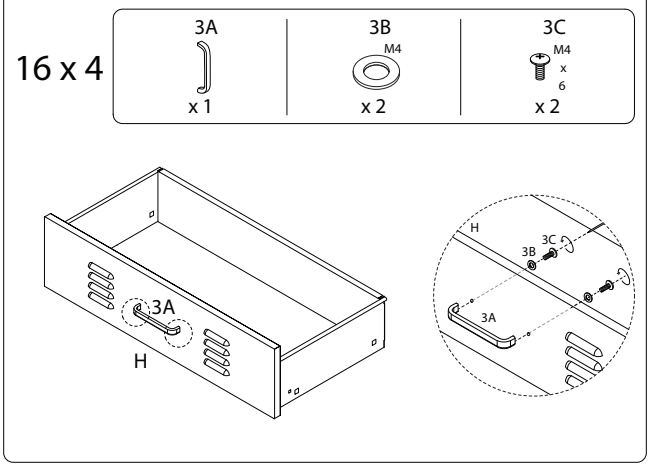

18

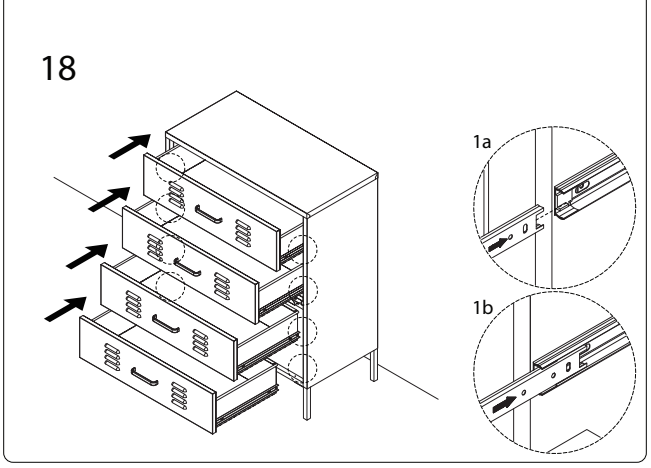

2121/ENAGO/070526/

2121/ENAGO/070526/