LORENA

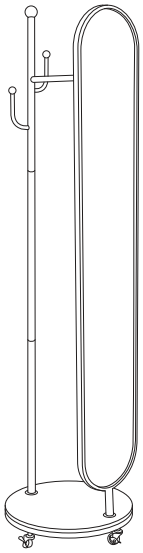

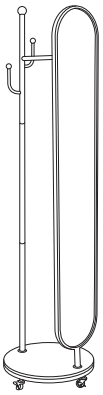

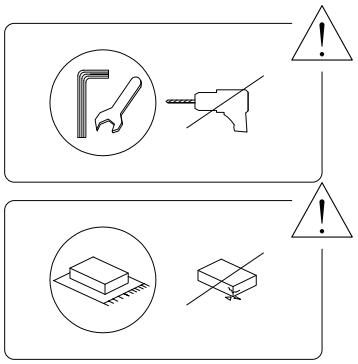

1/5

2301/LORENA/011024/

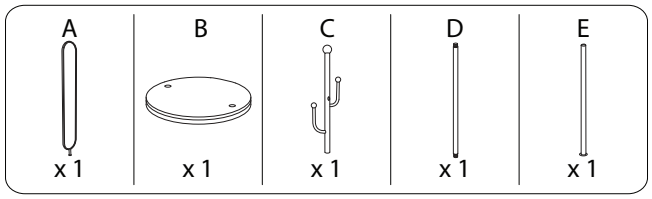

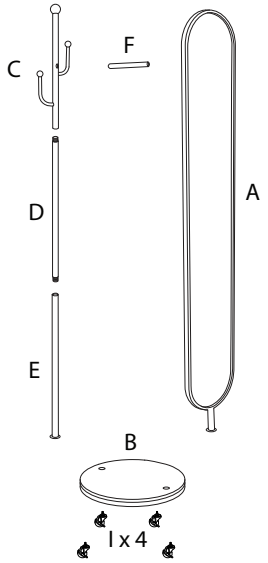

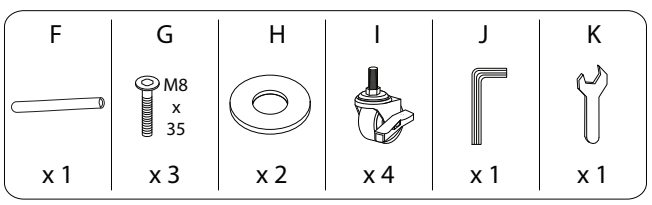

2/5

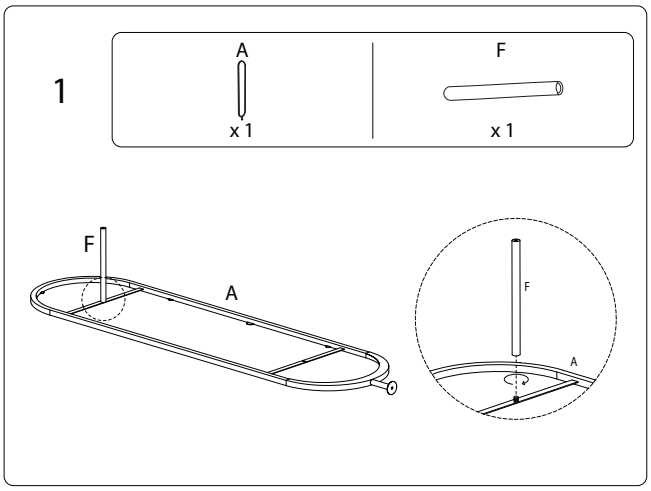

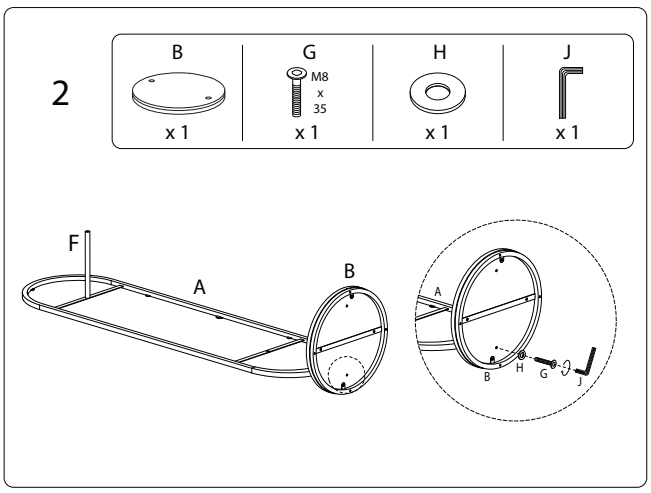

3/5

2301/LORENA/011024/

3

C	D	E
x 1	x 1	x 1

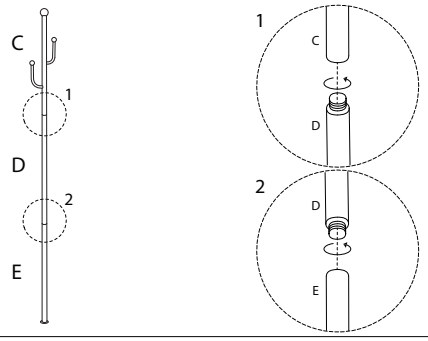

4

G	H	J
M8 x 35 x 2	x 1	x 1

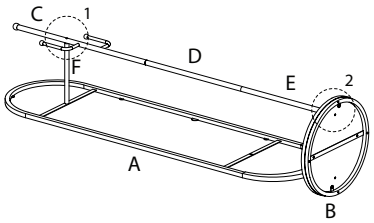

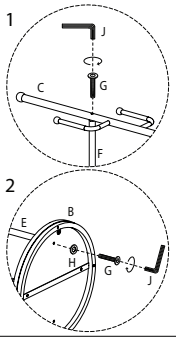

2301/LORENA/011024/

5

I	K
x 4	x 1

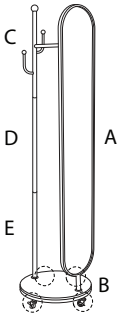

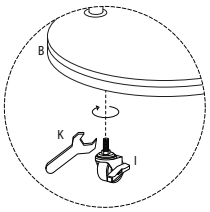

2301/LORENA/011024/