NUEVA

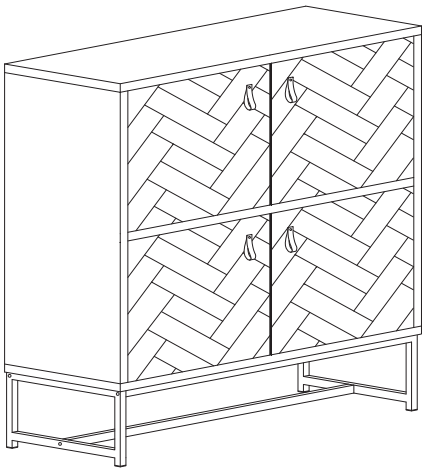

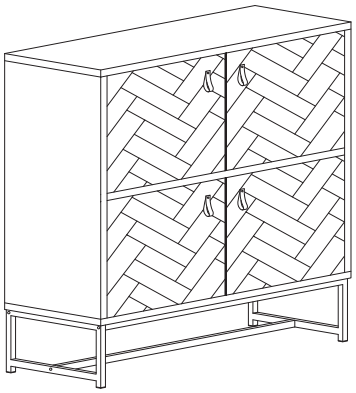

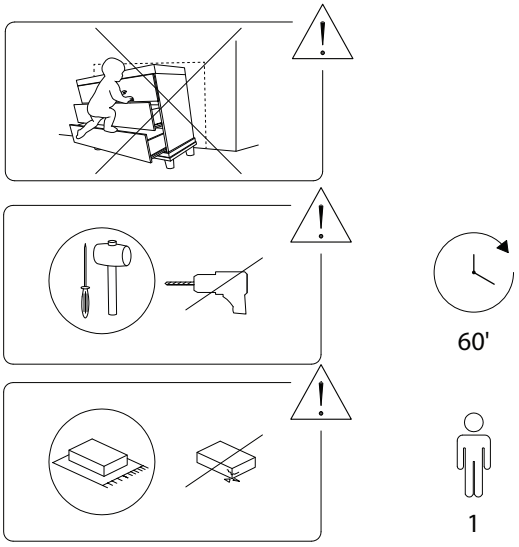

1444/NUEVA.S/210225/

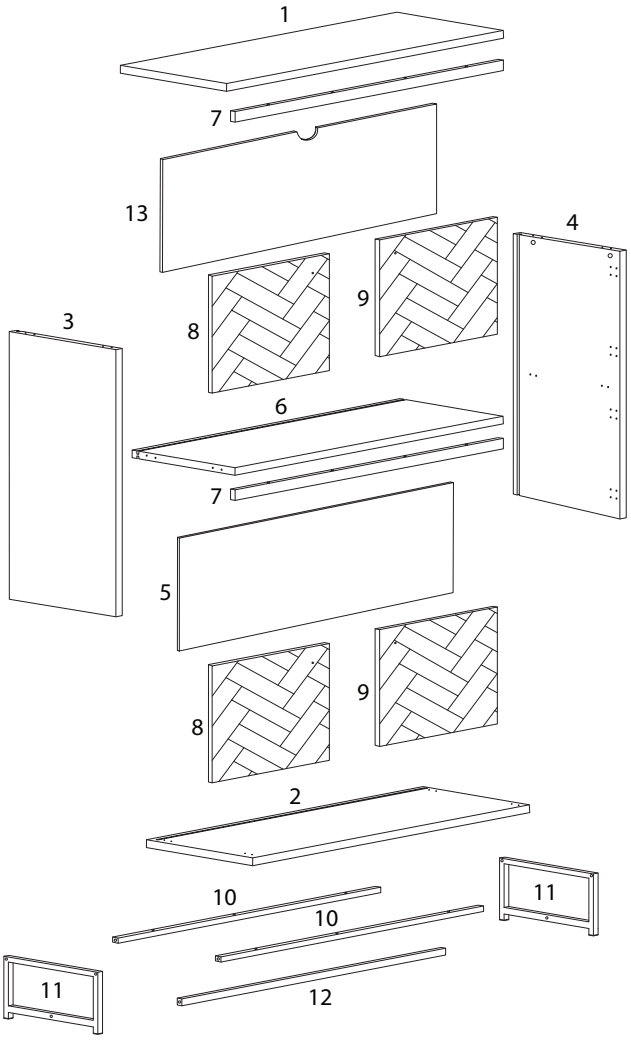

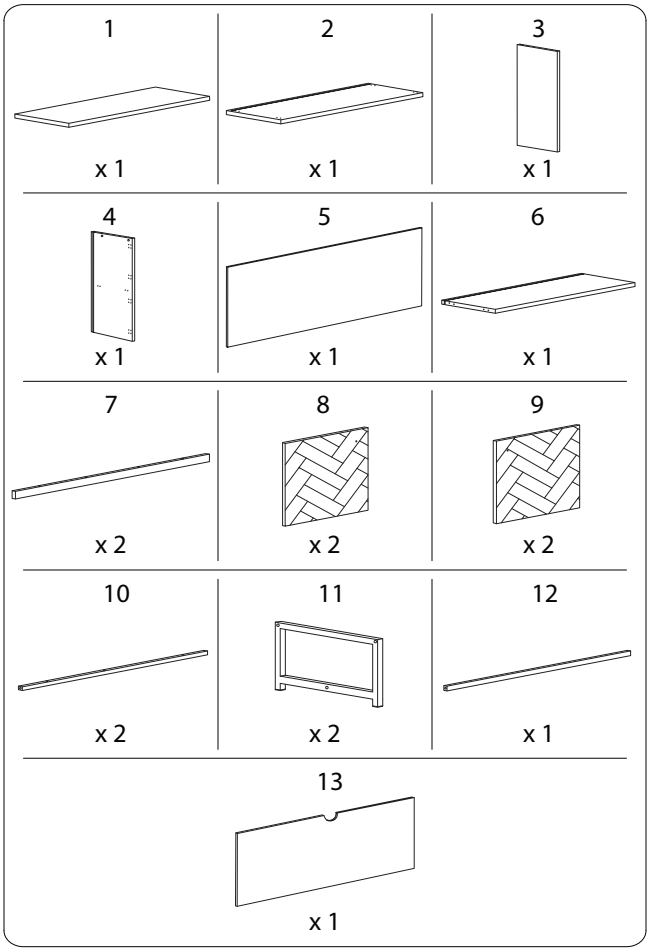

1444/NUEVA.S/210225/

1444/NUEVA.S/210225/

A x 8	B x 8	C x 12
D M4 x 40 x 12	I M6 x 35 x 6	J M4 x 25 x 6
K x 8	L M4 x 14 x 48	N M2.5 x 12 x 10
O x 10	P1 x 4	P2 M4 x 8 x 4
P3 x 4	W x 1	Y M4 x 10 x 1

1

10 x 2	11 x 2	I M6 x 35 x 4

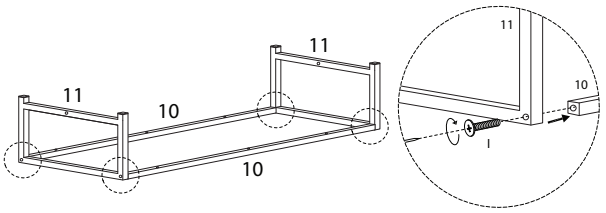

2

12 x 1	I M6 x 35 x 2

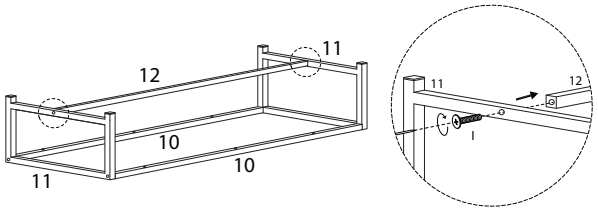

3

1 x 1	A x 4

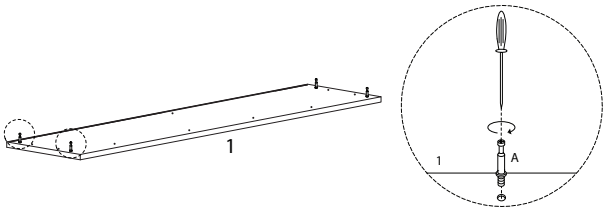

4

W x 1	Y M4 x 10 x 1

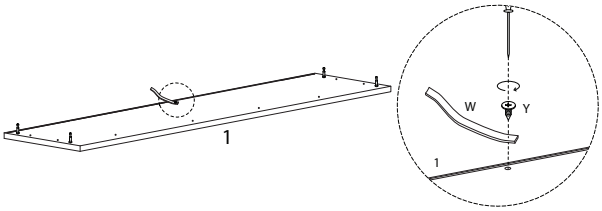

5

7 x 1	D M4 x 40 x 4

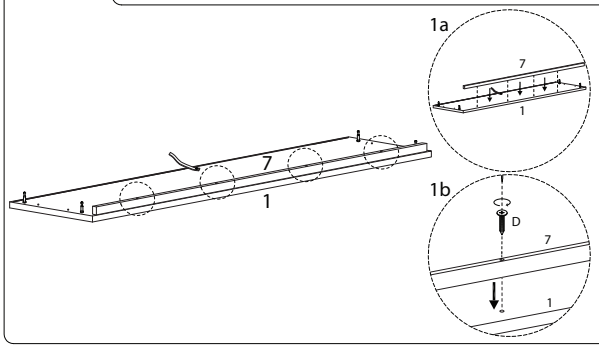

6

6 x 1	7 x 1	D M4 x 40 x 4

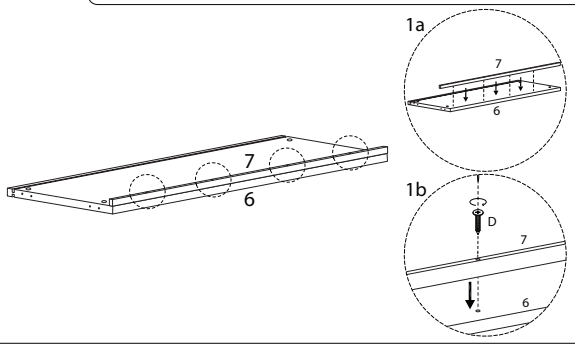

7

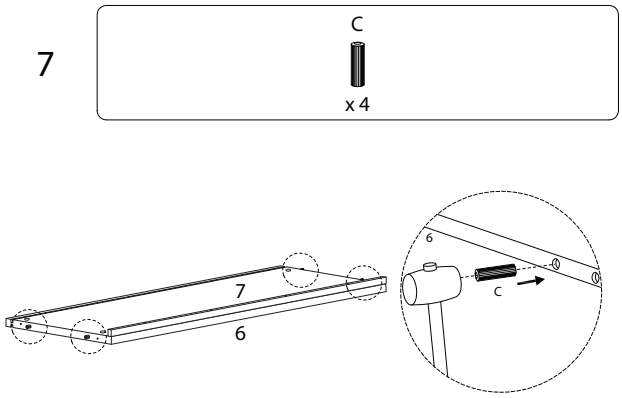

8

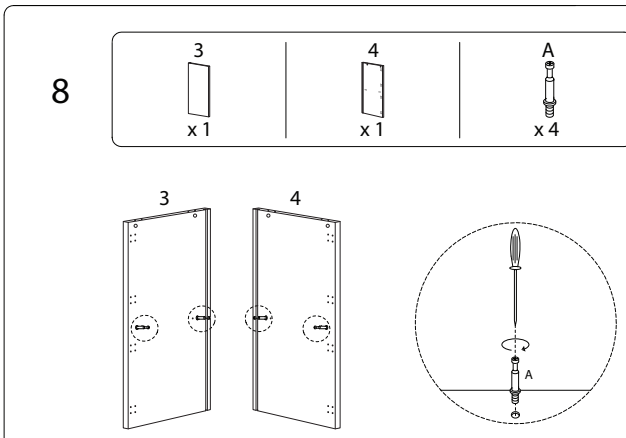

9

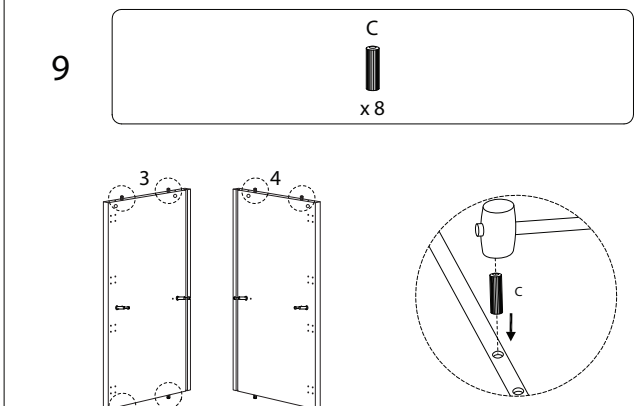

10

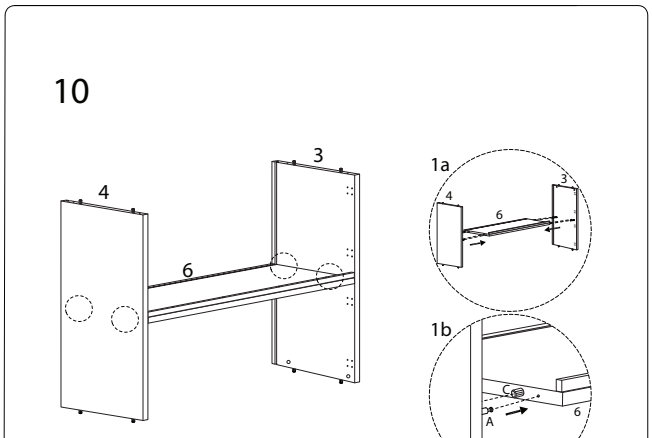

11

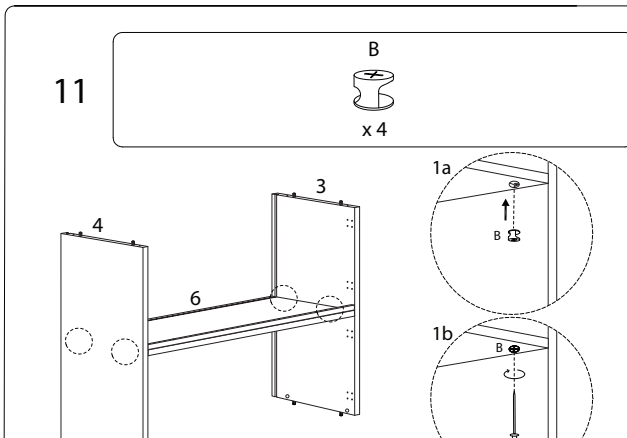

12

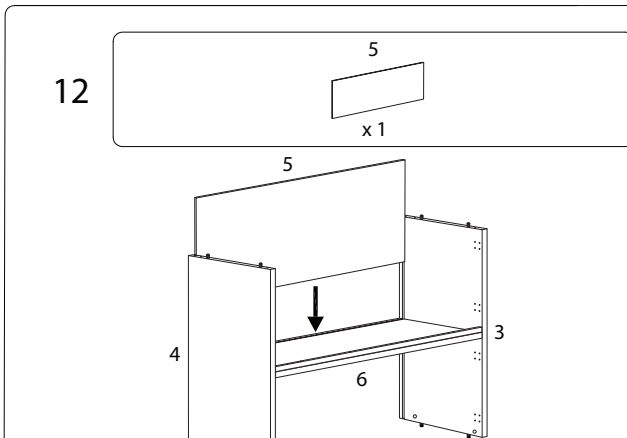

13

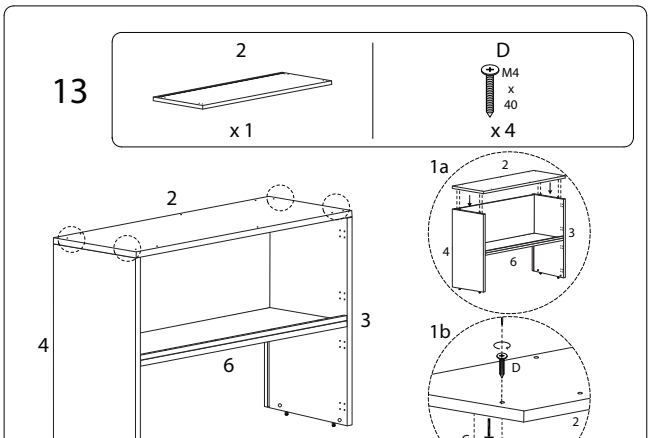

14

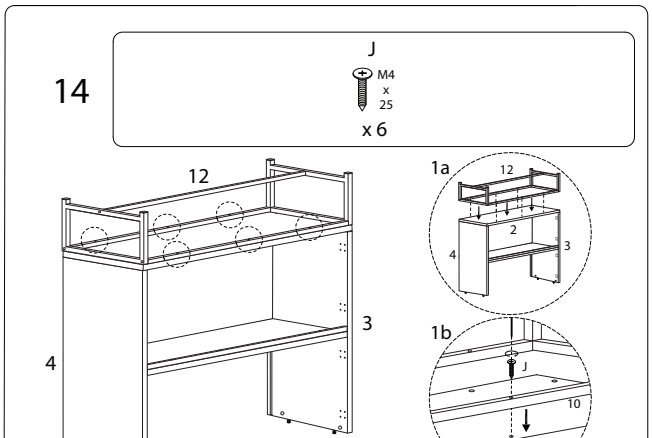

15

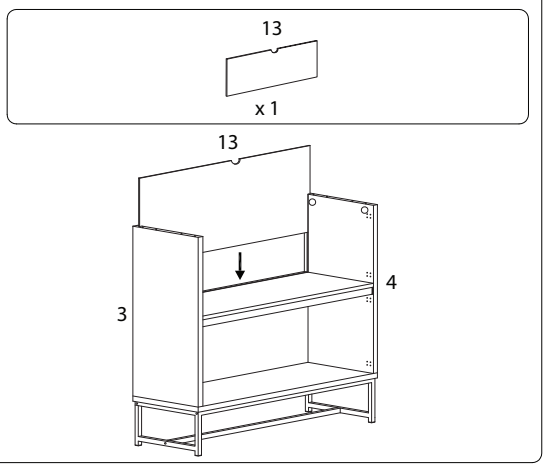

16

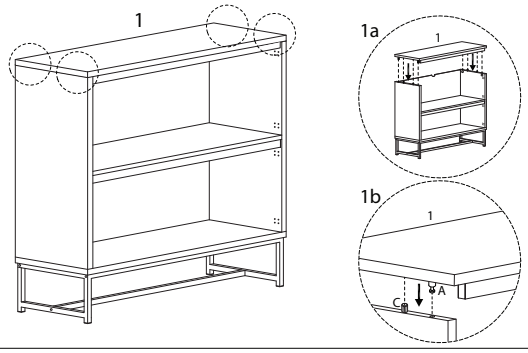

17

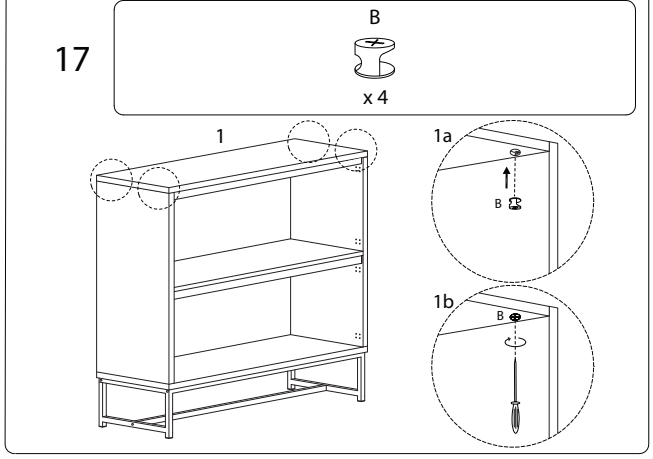

18 x 2

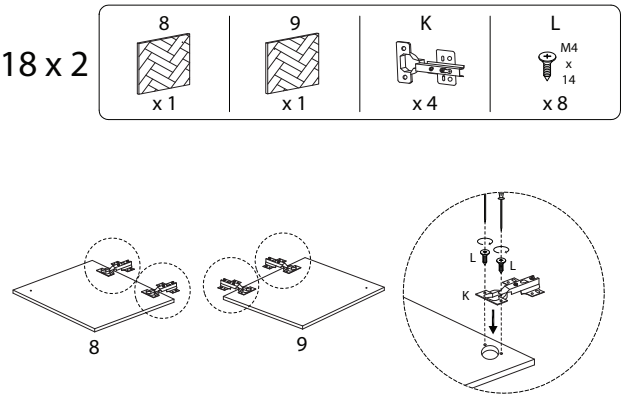

19 x 2

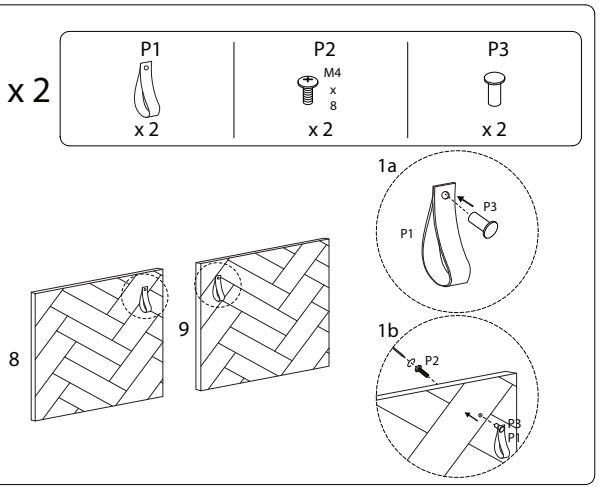

20

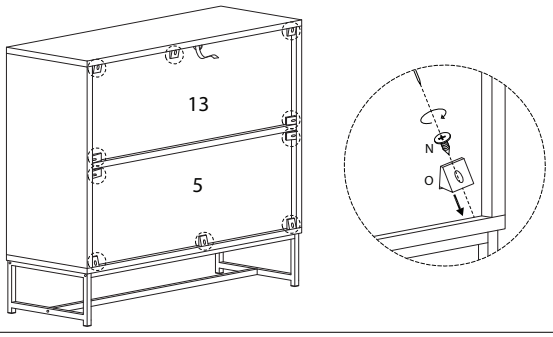

21

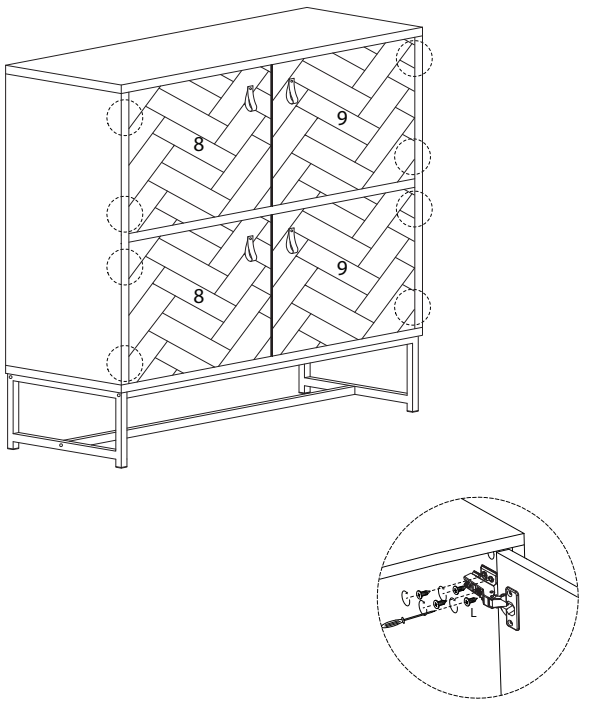

22

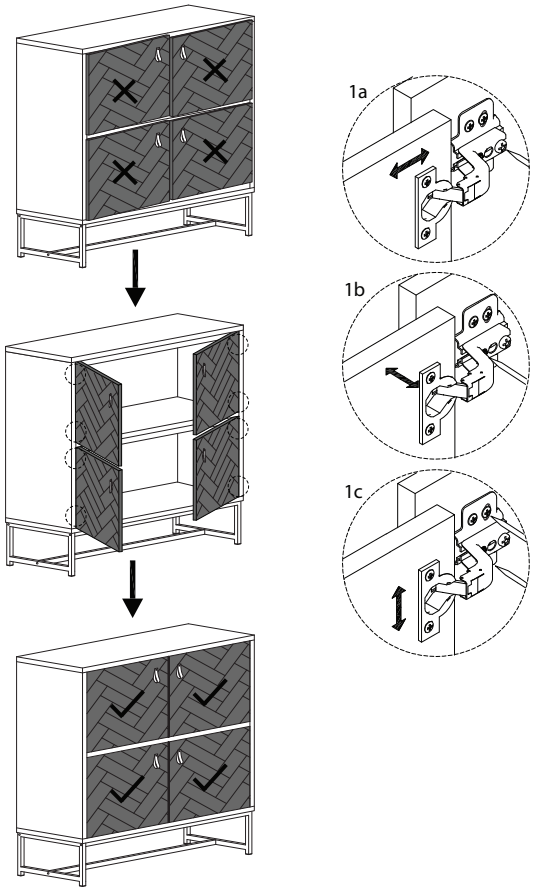

!

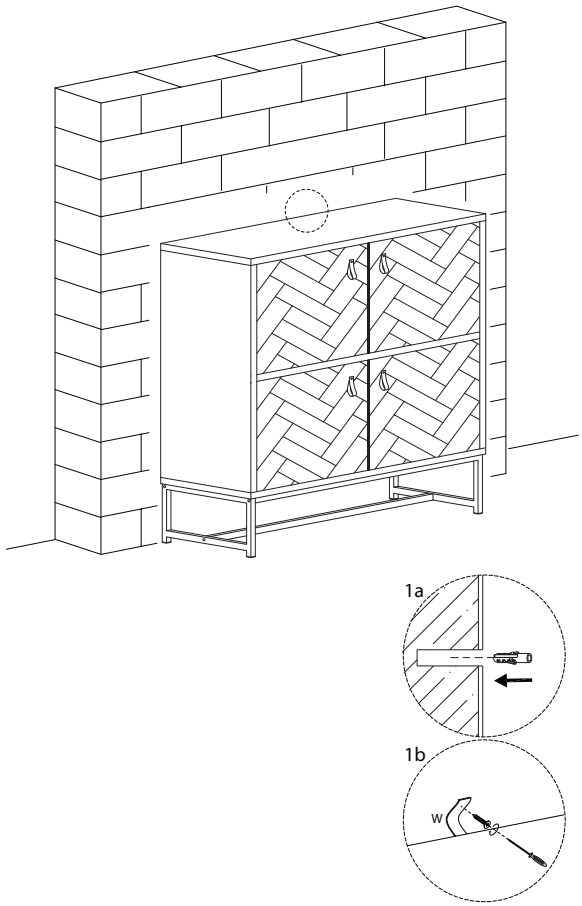

1444/NUEVA.S/210225/