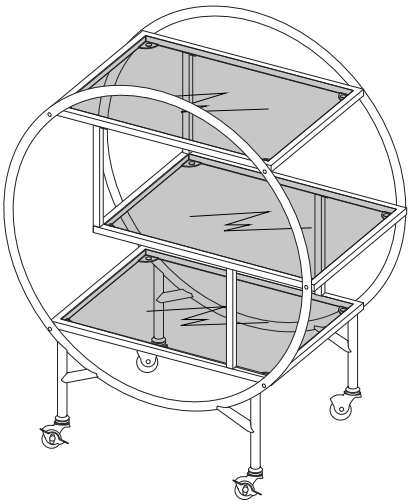

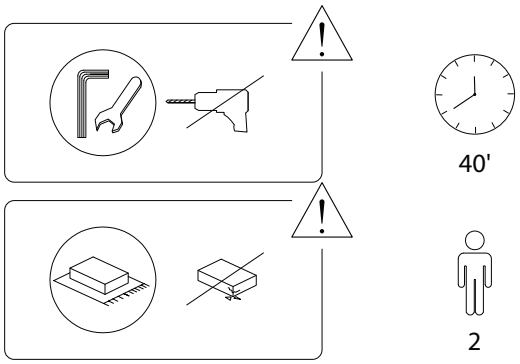

1/6

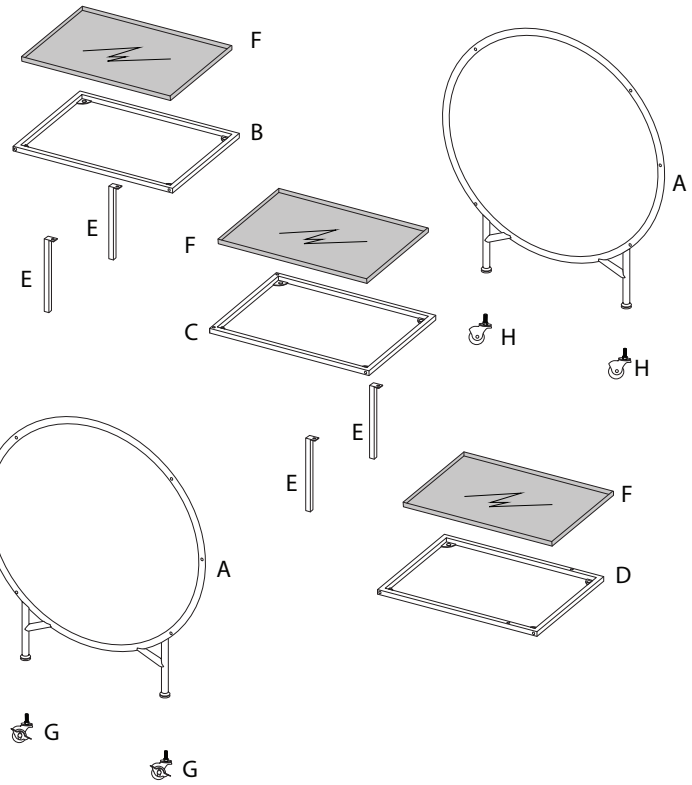

A	B	C	D
x 2	x 1	x 1	x 1

2/6

E	F	G
x 4	x 3	x 2
H	**I**	**J**
x 2	x 12	x 4
K	**L**	**M**
x 14	x 1	x 1

3/6

1

A	B	D	K	L
x 2	x 1	x 1	x 8	x 1

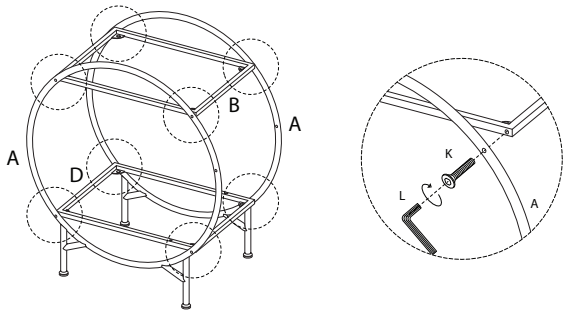

2

C	E	J	K	L
x 1	x 4	x 4	x 4	x 1

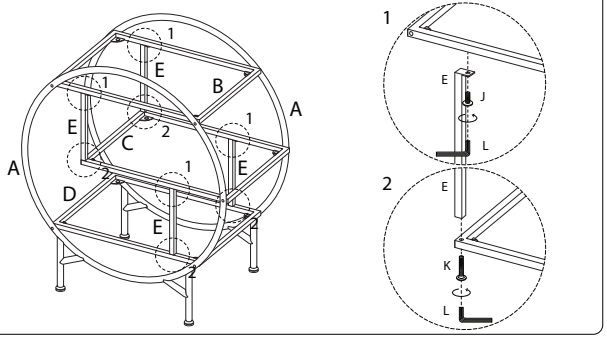

4/6

3

K
M6 x 30
x 2

L
x 1

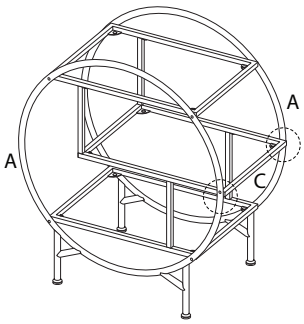

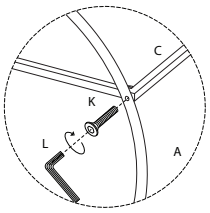

4

G
x 2

H
x 2

M
x 1

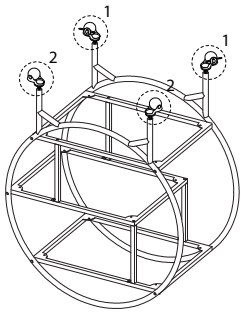

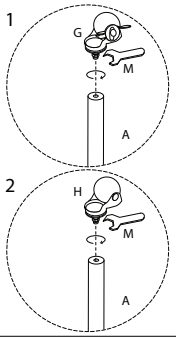

5

I
x 12

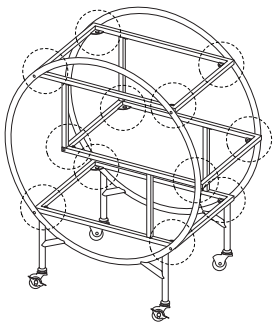

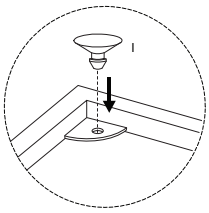

6

F
x 3

