VILLAZ

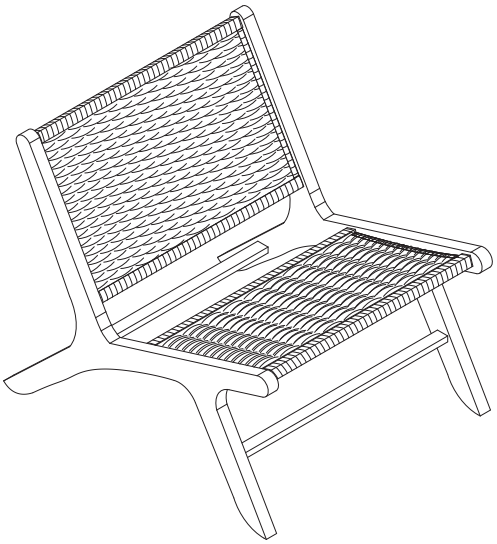

1/5

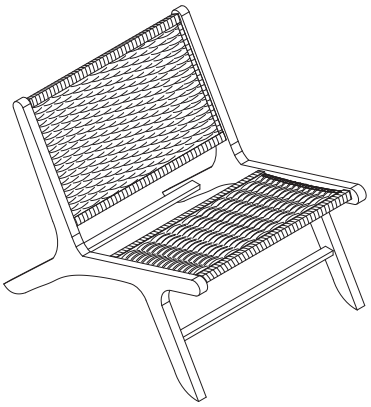

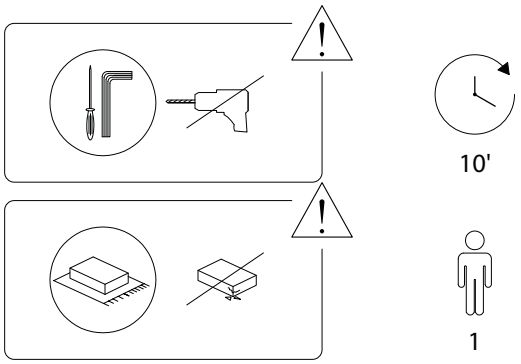

2/5

2643/VILLAZ/110326/

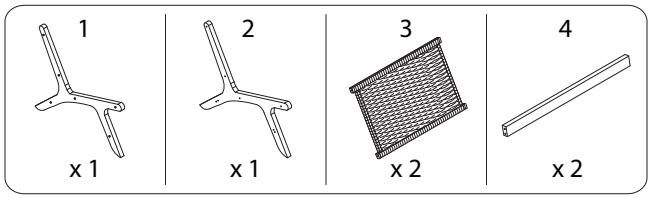

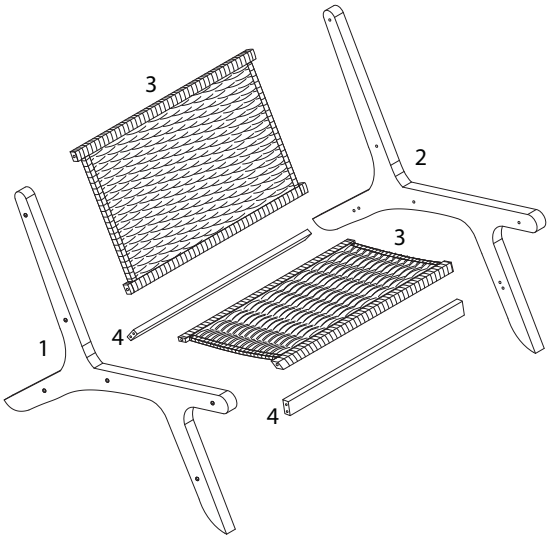

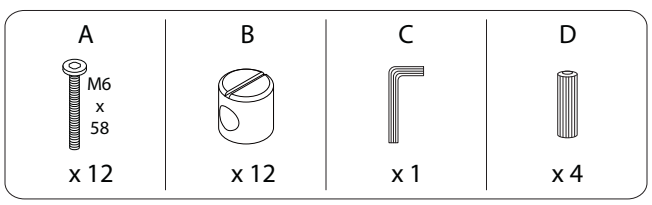

3/5

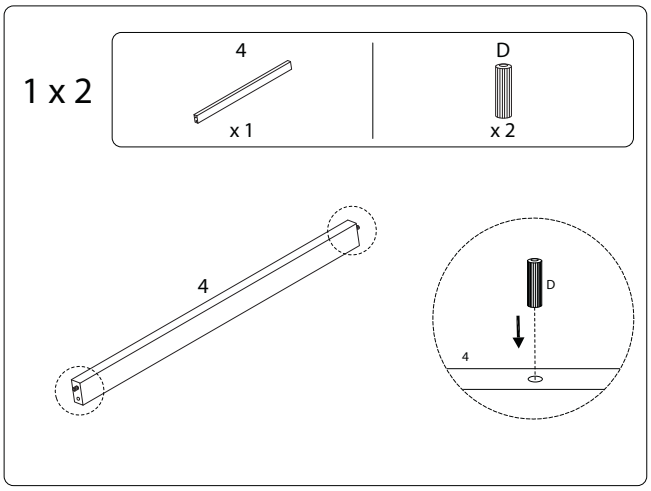

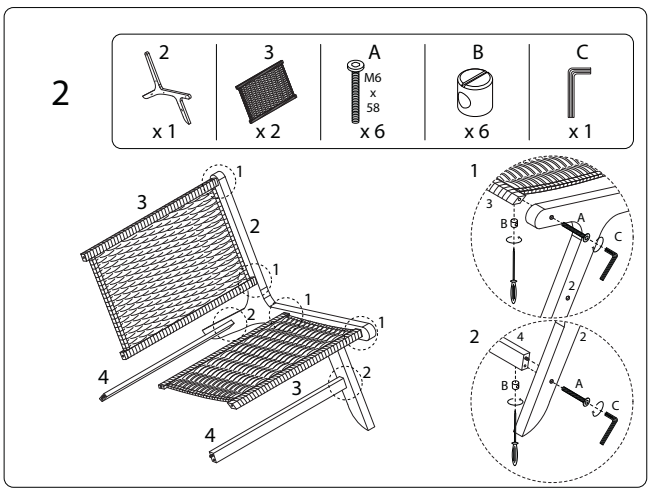

4/5

2643/VILLAZ/110326/

3

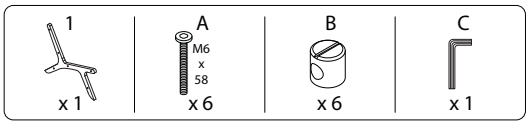

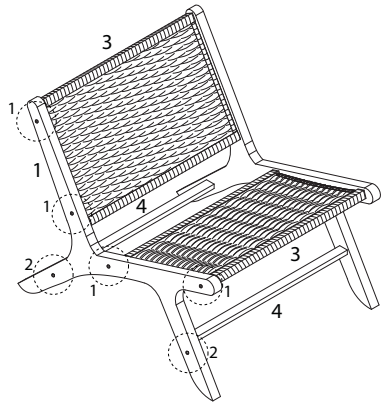

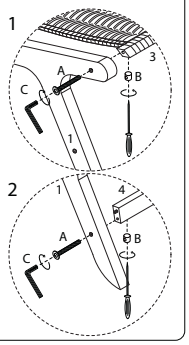

2643/VILLAZ/110326/