NIMES

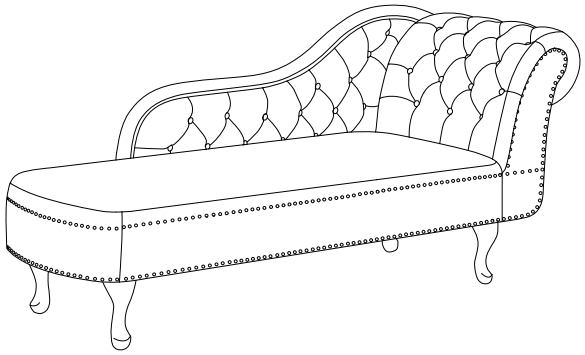

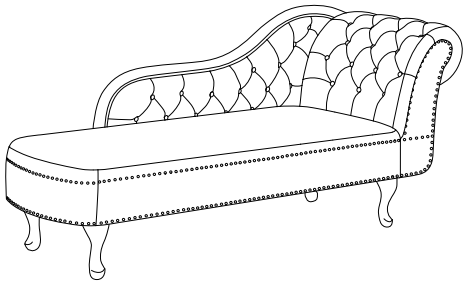

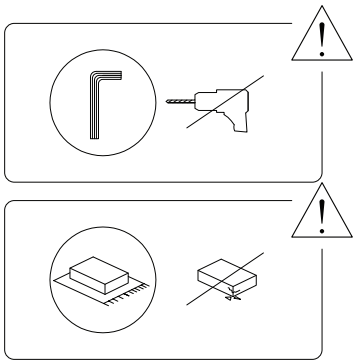

Beliani

Beliani
1106/NIMES/290823/

A	B	C	D
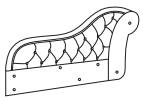			
x 1	x 1	x 1	x 4

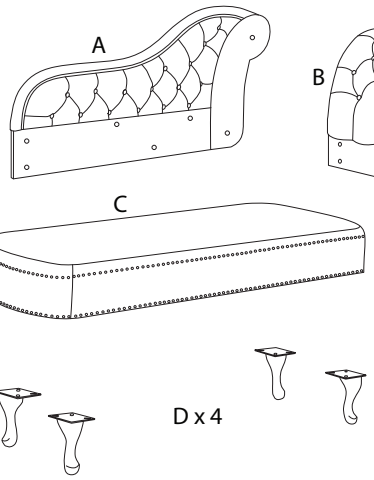

E	F	G	H
 M8 x 25	 M8 x 40		
x 12	x 11	x 11	x 1

Beliani
1106/NIMES/290823/

!

C

x 1

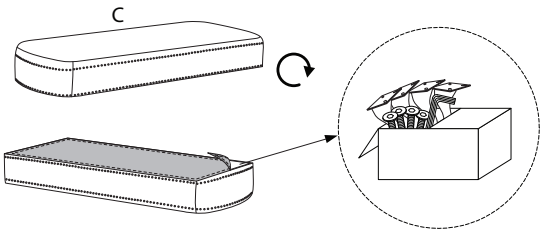

1

B	F	G	H
	 M8 x 40		
x 1	x 4	x 4	x 1

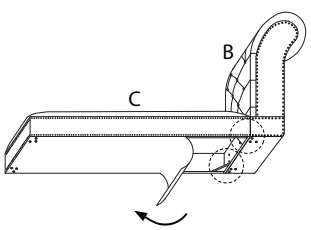

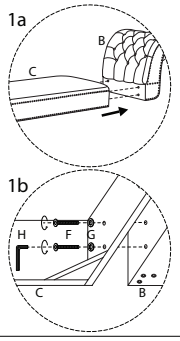

Beliani
1106/NIMES/290823/

!

A

x 1

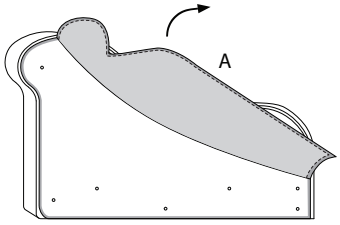

2

F	G	H
M8 x 40		
x 7	x 7	x 1

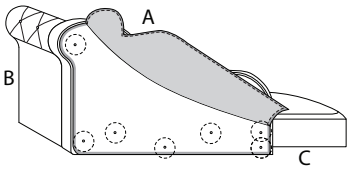

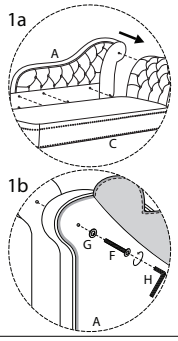

Beliani

1106/NIMES/290823/

3

D	E	H
	M8 x 25	
x 4	x 12	x 1

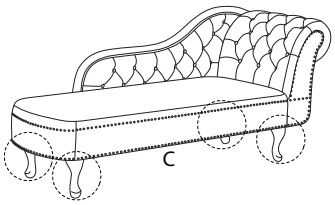

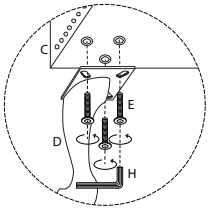

Beliani

1106/NIMES/290823/