RAFFRA

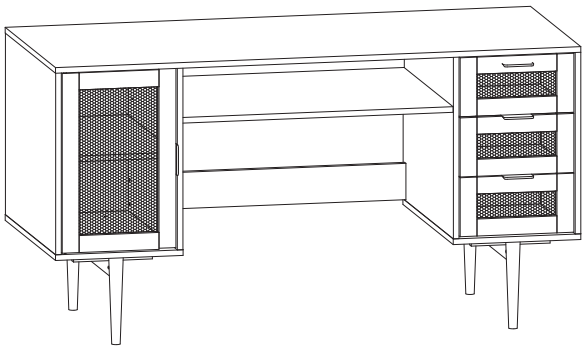

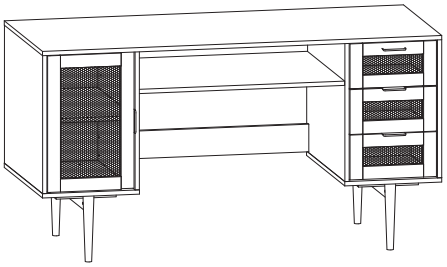

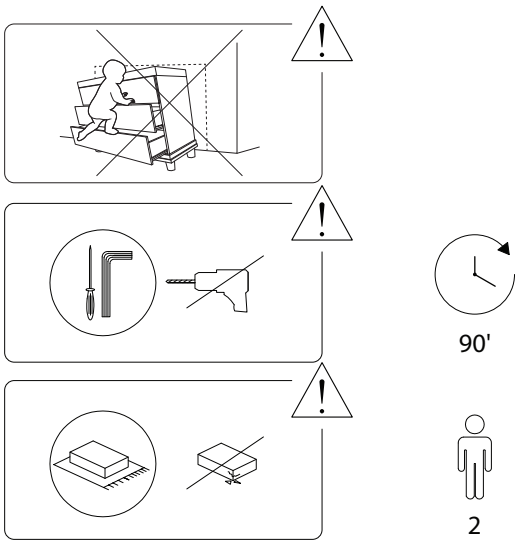

2838/RAFFRA/200526

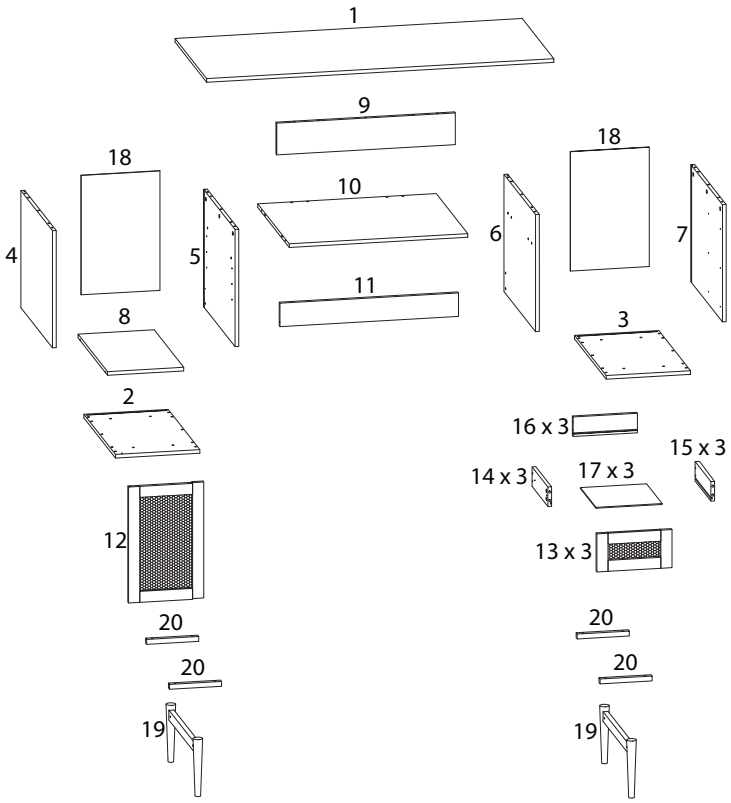

2838/RAFFRA/200526

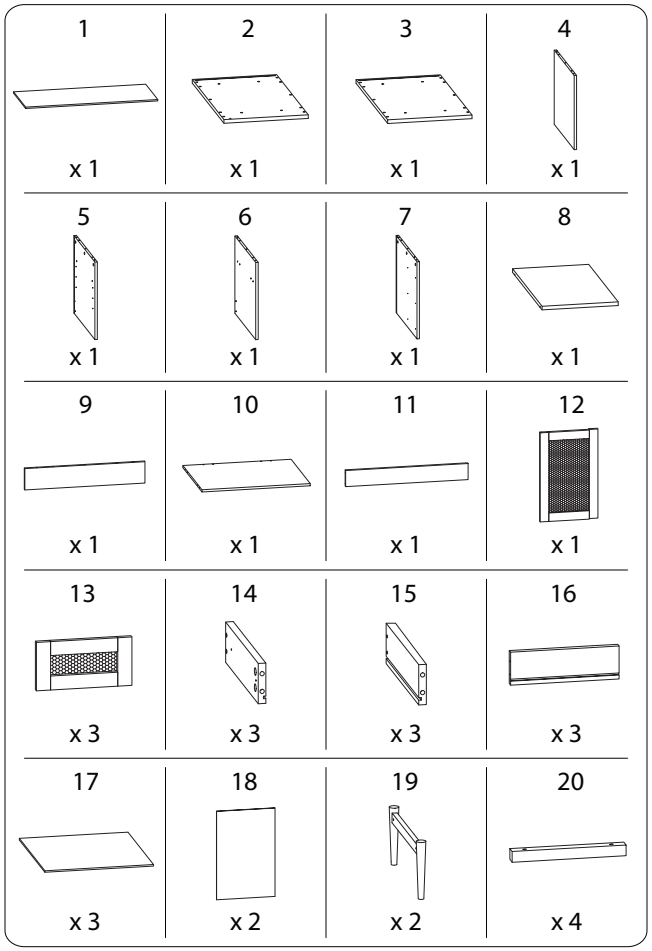

2838/RAFFRA/200526

A	B	C	D
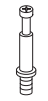		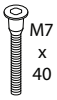	
x 27	x 27	x 22	x 24
E	**F1**	**F2**	**G**
	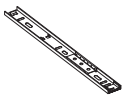		
x 34	x 6	x 6	x 1
H	**I**	**J**	**K**
			
x 2	x 8	x 4	x 8
L	**M**	**N**	**O**
		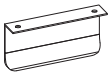	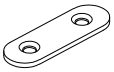
x 2	x 8	x 4	x 1
P	**Q**	**R**	**S**
			
x 2	x 4	x 12	x 4

!

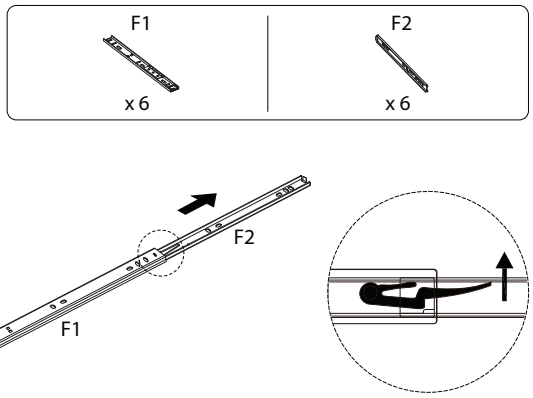

2

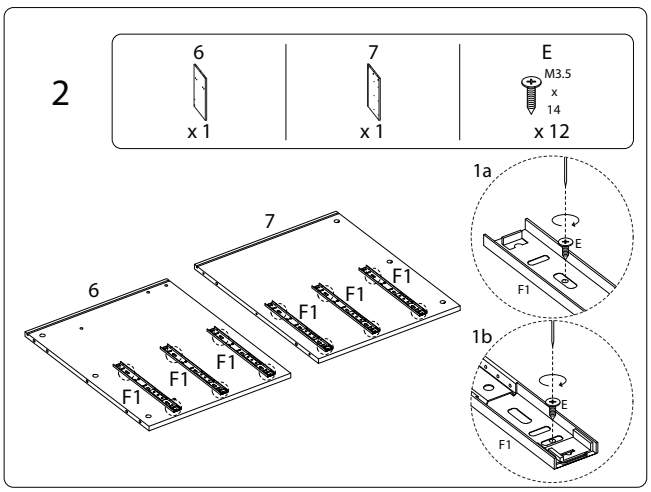

3

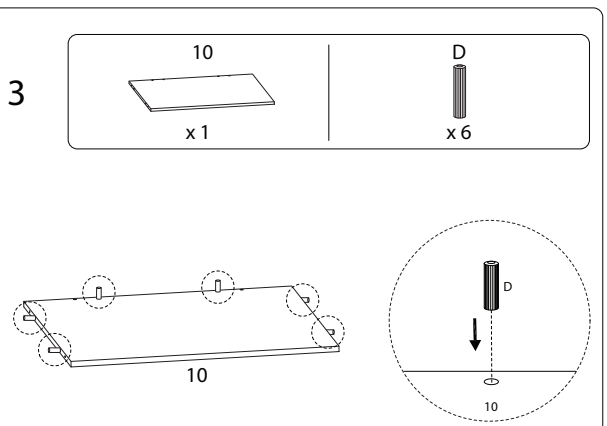

5

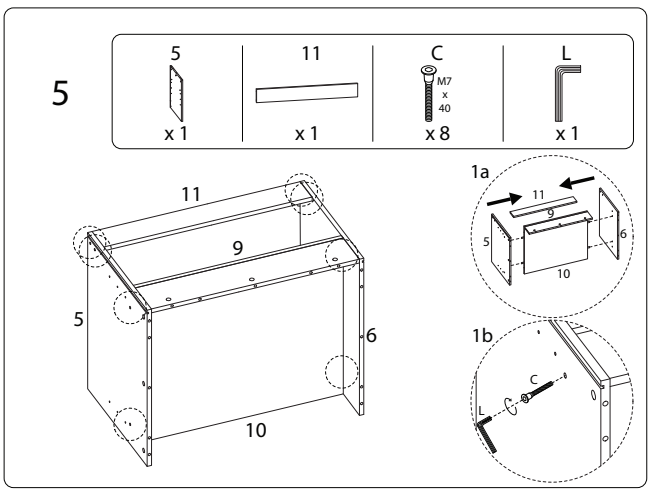

4

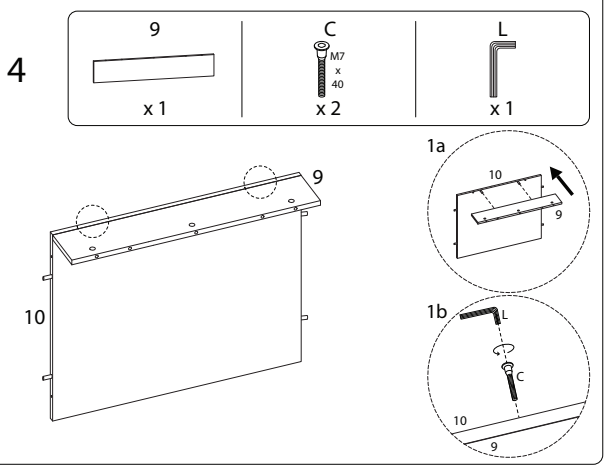

6

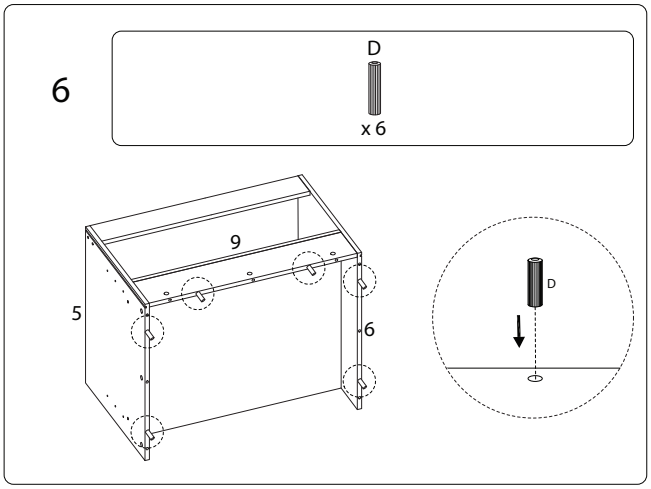

7

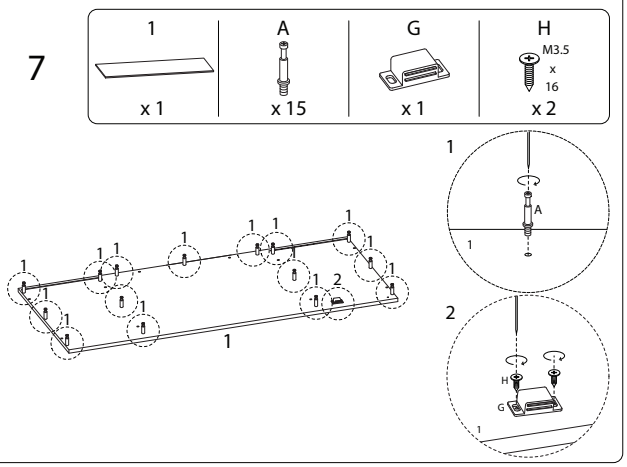

8

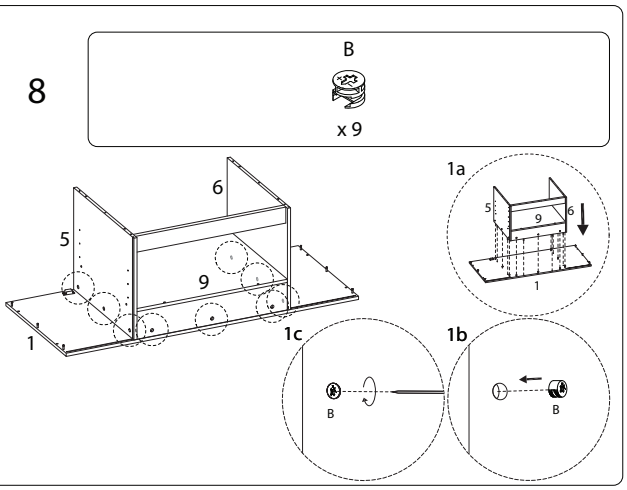

9

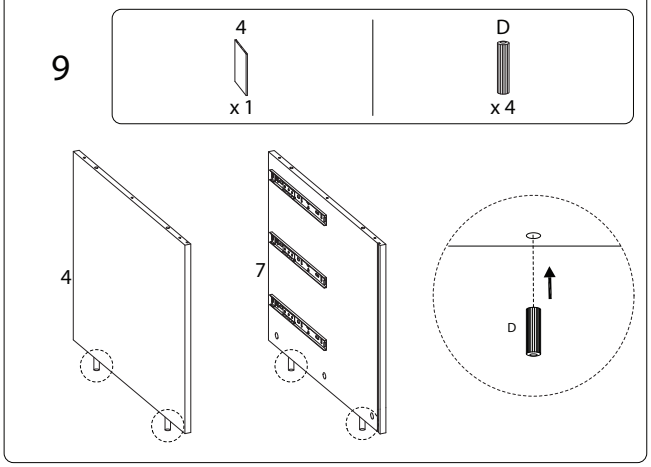

10

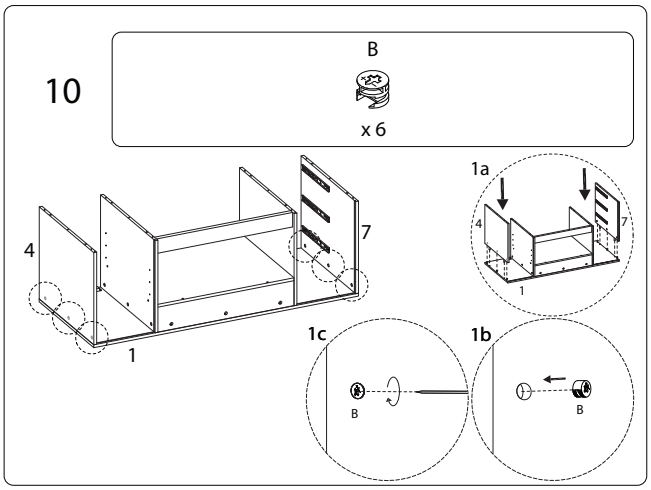

11

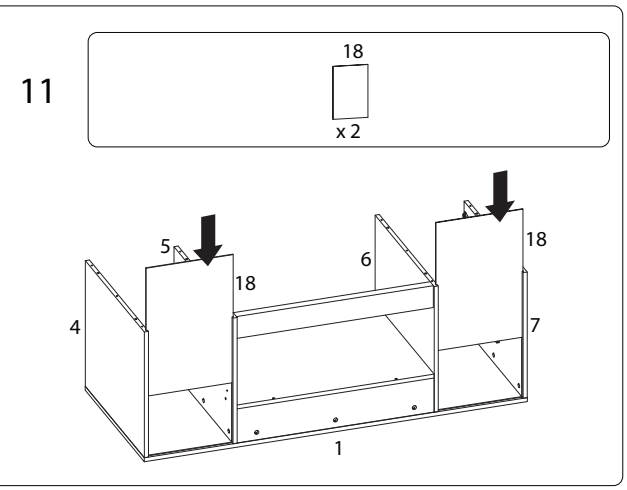

12

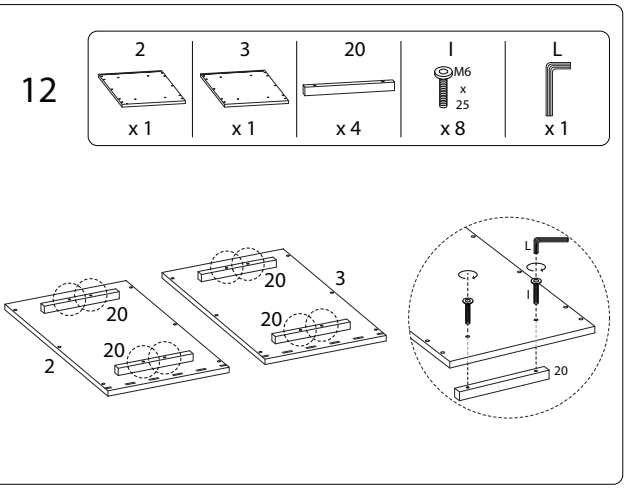

13

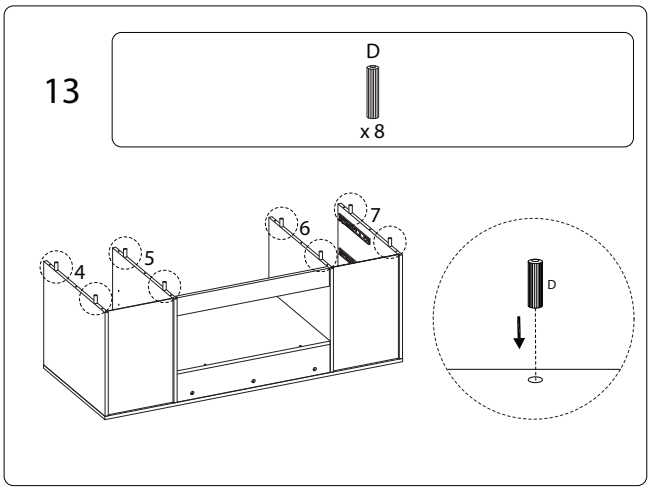

14

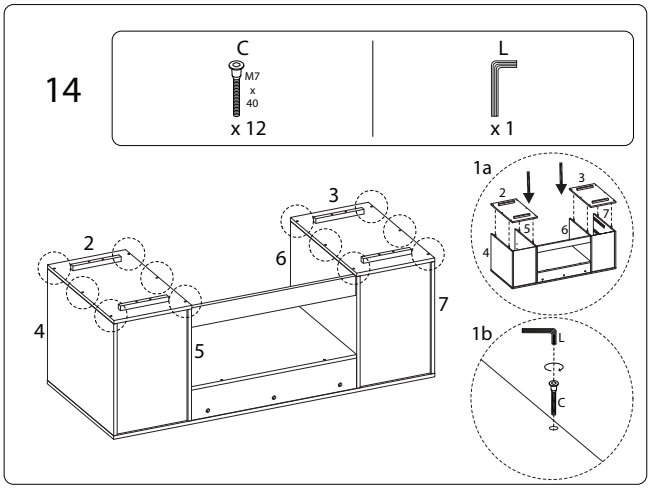

15 x 2

19	J	L	M	S
x 1	M6 x 18 x 2	x 2	x 4	x 2

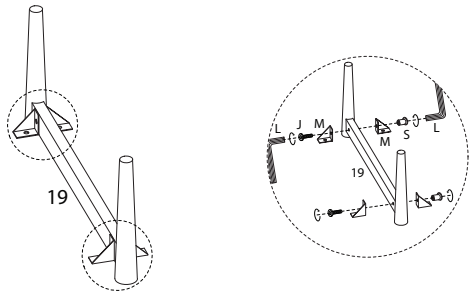

17

Q
x 4

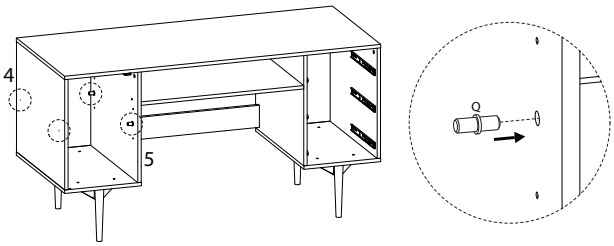

16

K	L
M6 x 12 x 8	x 1

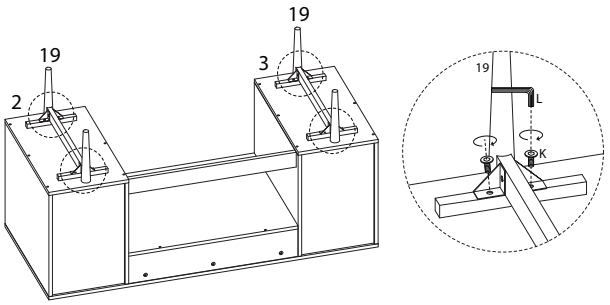

18

8
x 1

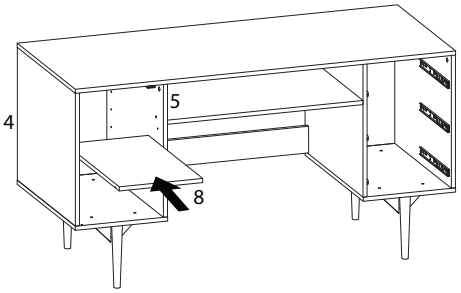

2838/RAFFRA/200526

2838/RAFFRA/200526

19

12	E	N	O	P
x 1	M3.5 x 14 x 4	x 1	x 1	x 2

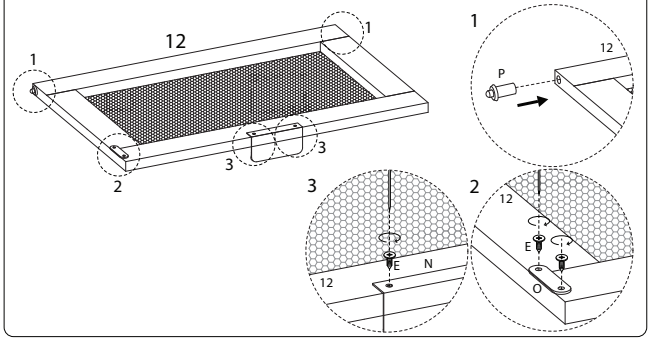

21 x 3

13	A	E	N
x 1	x 4	M3.5 x 14 x 2	x 1

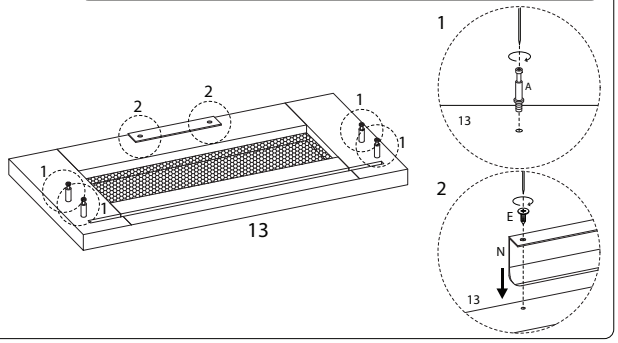

20

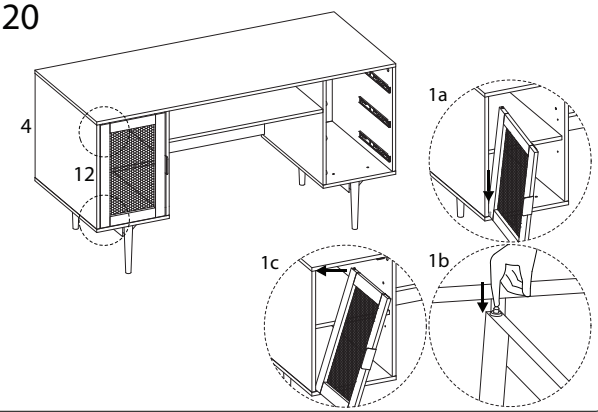

22 x 3

14	15	16	R
x 1	x 1	x 1	M4 x 35 x 4

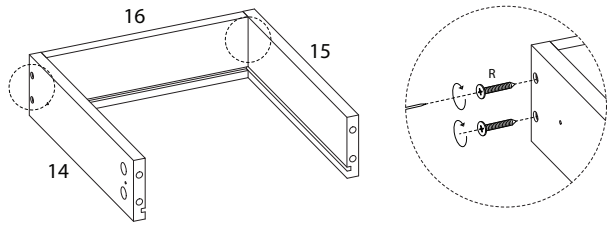

2838/RAFFRA/200526

2838/RAFFRA/200526

23 x 3

17

x 1

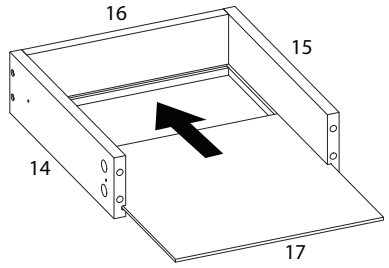

24 x 3

B

x 4

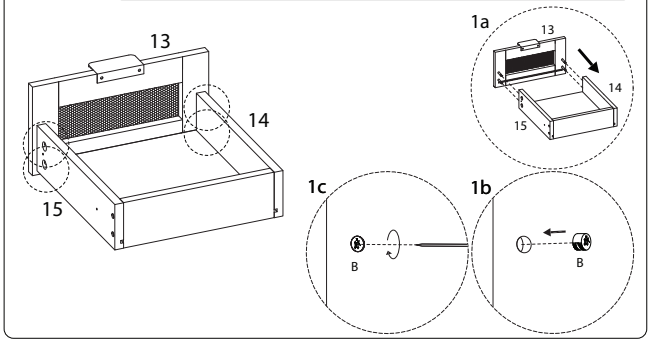

25 x 3

F2

x 2

E

M3.5 x 14

x 4

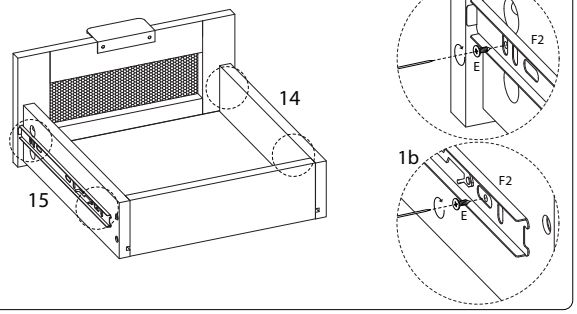

26

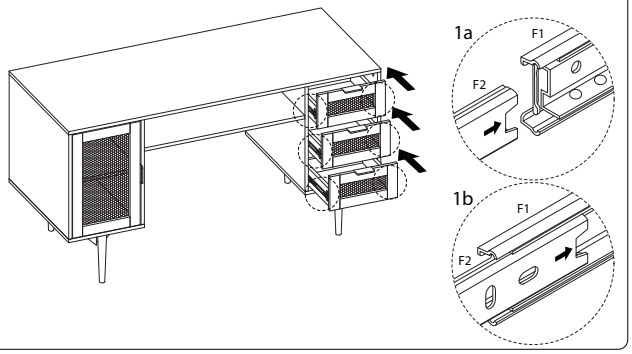

2838/RAFFRA/200526

2838/RAFFRA/200526