VITRION

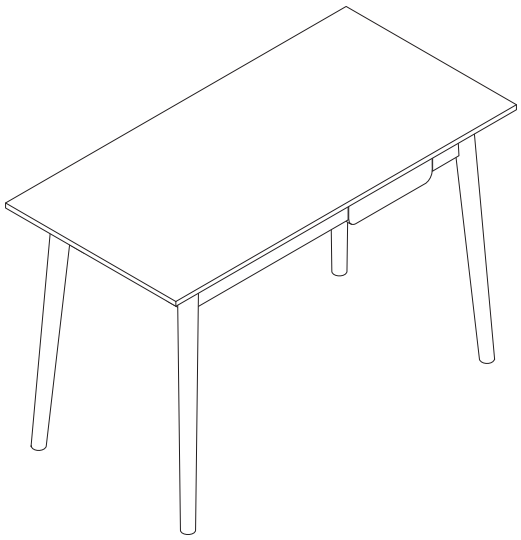

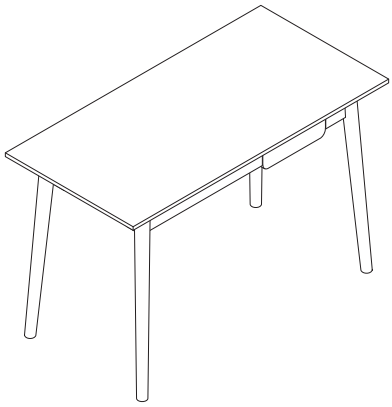

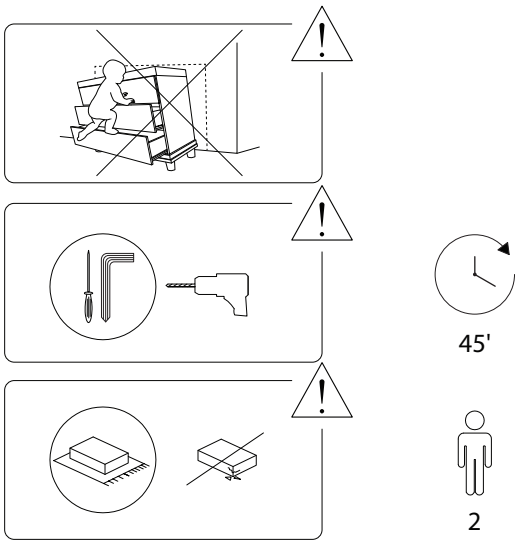
45'
2

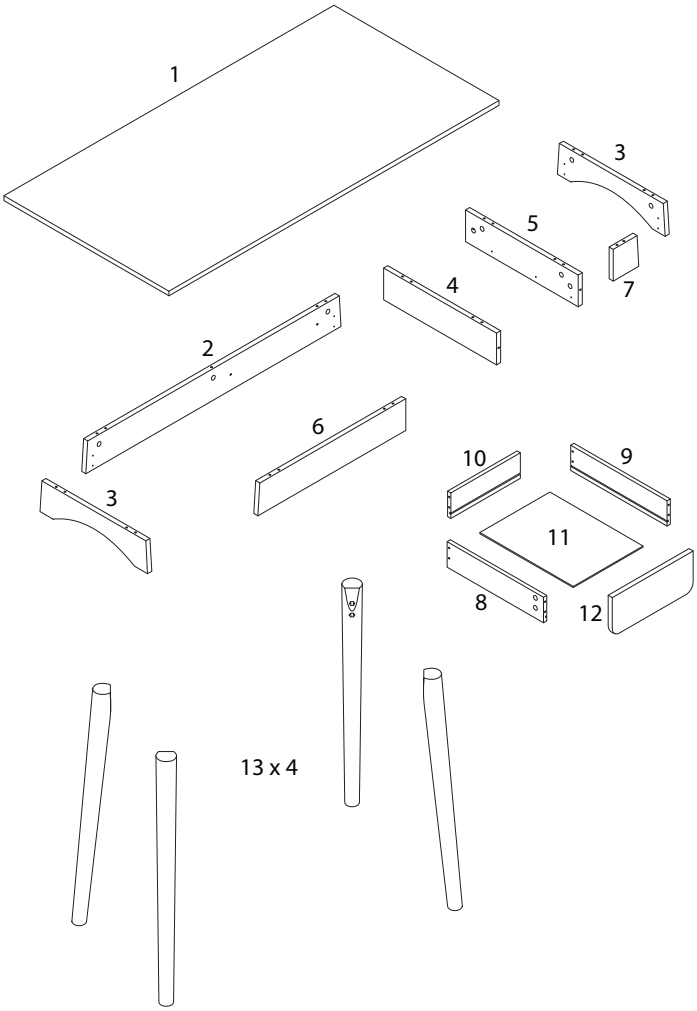
1
3
5
7
4
2
6
10
9
3
11
8
12
13 x 4

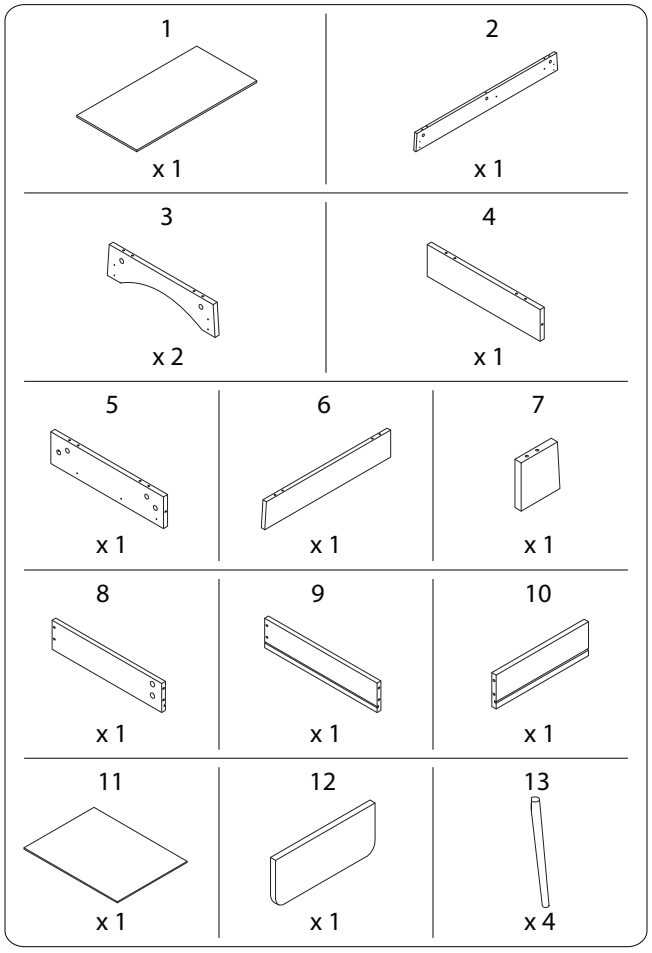
1
x 1
2
x 1
3
x 2
4
x 1
5
x 1
6
x 1
7
x 1
8
x 1
9
x 1
10
x 1
11
x 1
12
x 1
13
x 4

A	B	C
x 22	x 22	x 13
D	E	F
M4 x 35	M3 x 12	
x 5	x 12	x 8

G	HCL	HCR	HDL
x 4	x 1	x 1	x 1
HDR	I	J	K1
	M6 x 30		
x 1	x 8	x 1	x 1
K2	L	M	N
			M4 x 14
x 1	x 4	x 2	x 17

1

1	2	4	5	6
x 1	x 1	x 1	x 1	x 1
7	A	E	HCL	HCR
x 1	x 18	M3 x 12 x 6	x 1	x 1

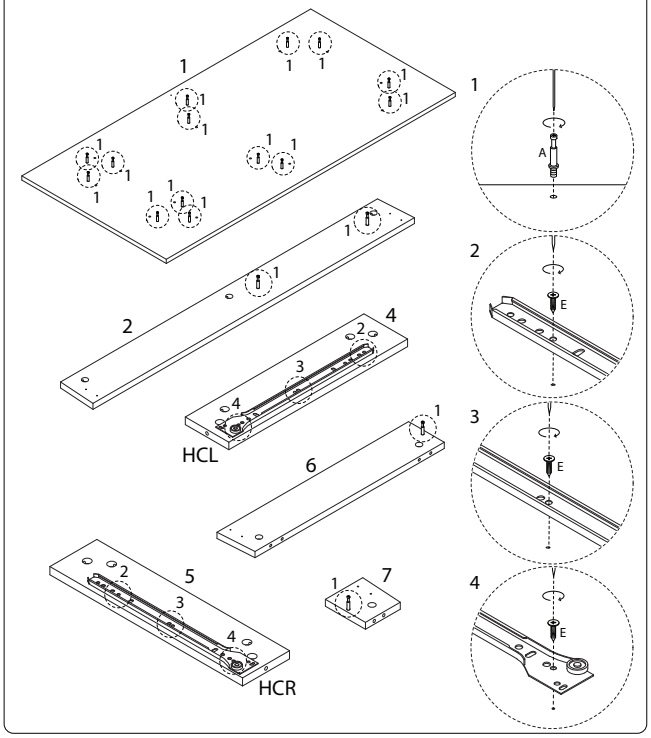

2

B
x 1

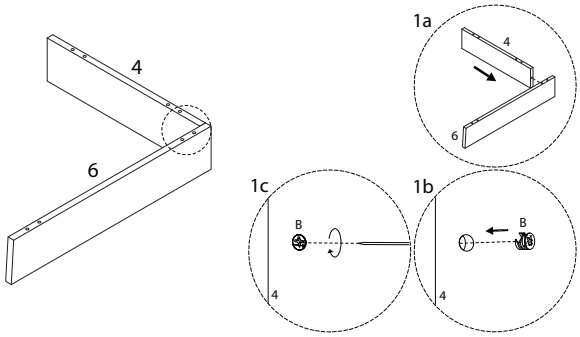

4

B
x 2

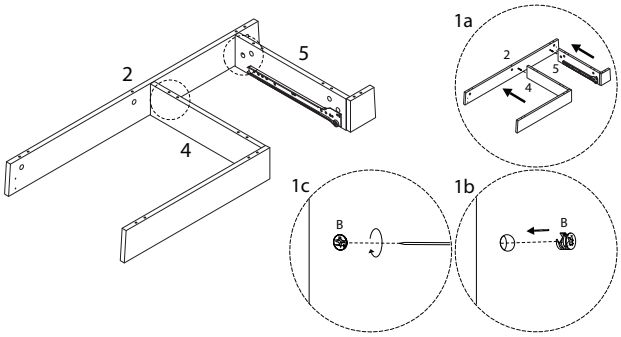

3

B
x 1

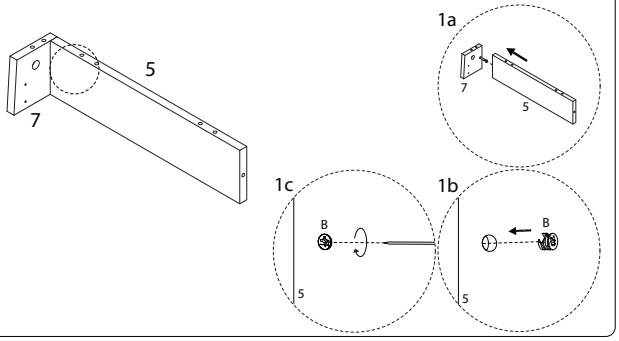

5 x 2

3	L	N
x 1	x 2	M4 x 14 x 4

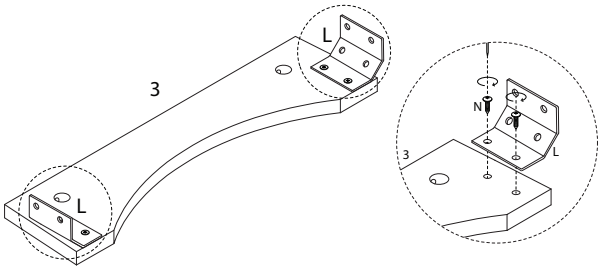

6

N
M4 x 14
x 8

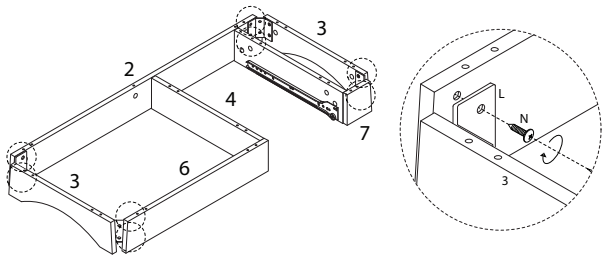

7

13	F	G	I	J
x 4	x 8	x 4	M6 x 30 x 8	x 1

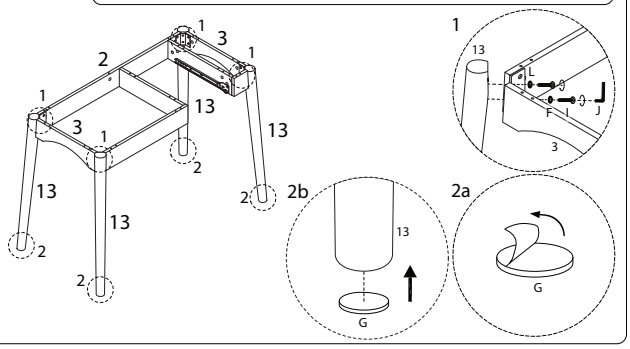

8

C
x 13

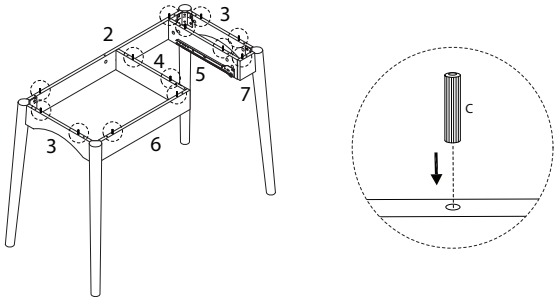

9

B
x 14

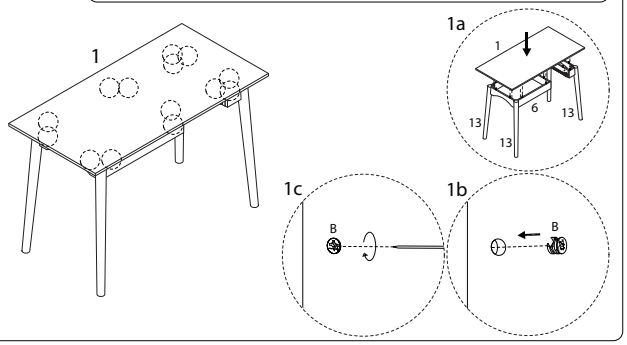

10

8	9	10	D
x 1	x 1	x 1	M4 x 35 x 4

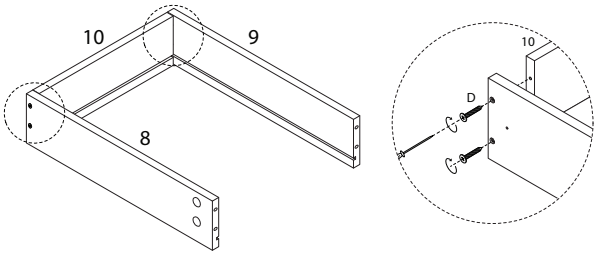

11

11
x 1

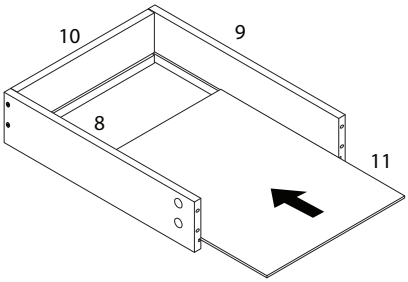

12

12	A
x 1	x 4

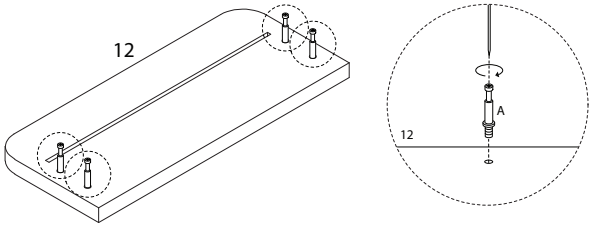

13

B
x 4

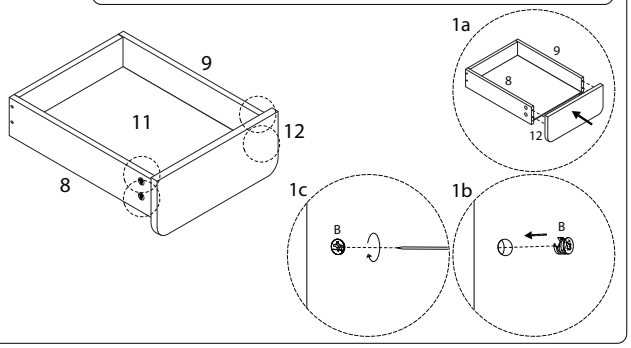

14

E	HDL	HDR
M3 x 12		
x 6	x 1	x 1

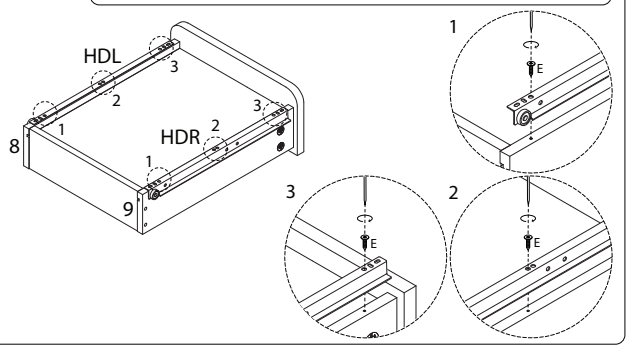

15

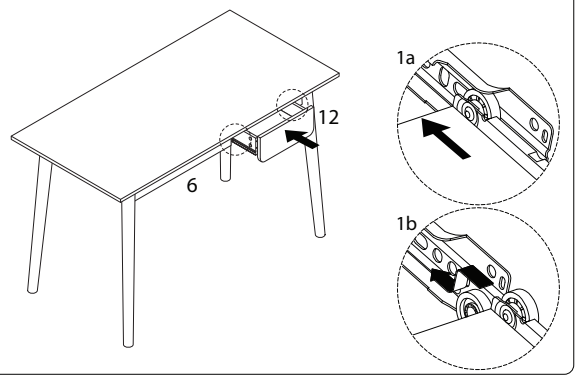

16
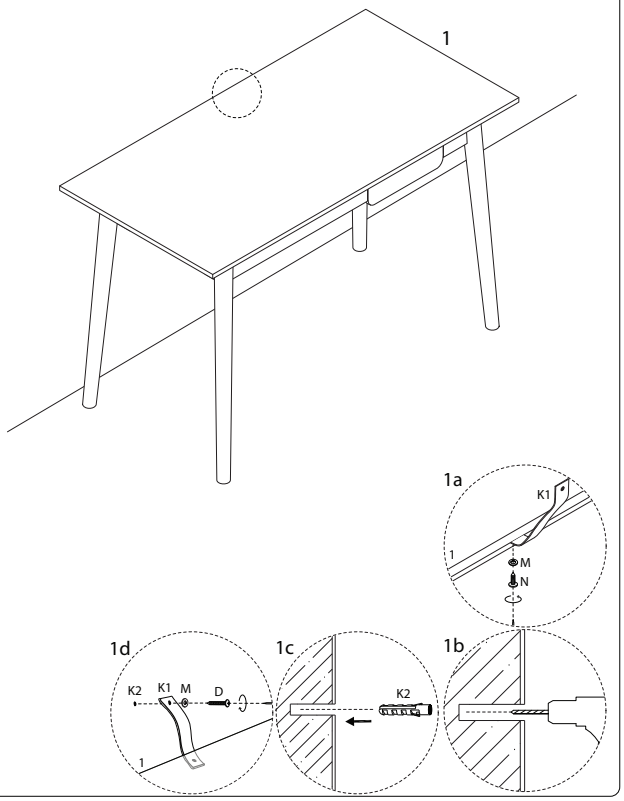
D	K1	K2	M	N
M4 x 35				M4 x 14
x 1	x 1	x 1	x 2	x 1