ALLOS

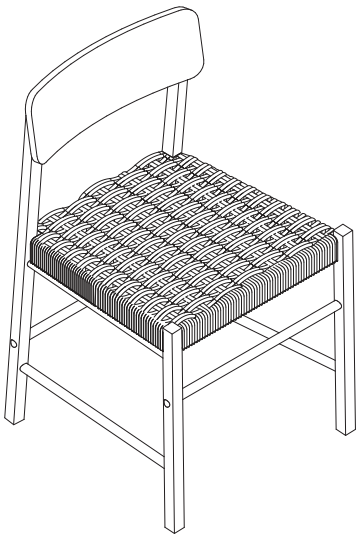

1/7

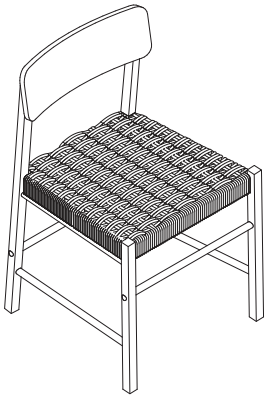

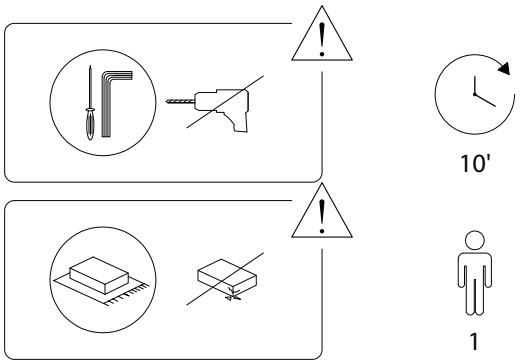

2/7

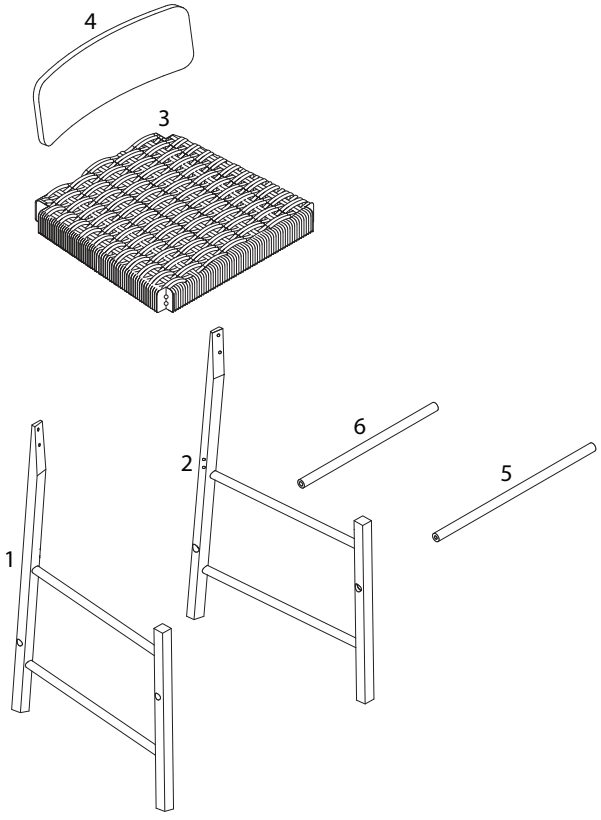

3/7

1 x 1	2 x 1	
3 x 1	4 x 1	
5 x 1	6 x 1	
A M6 x 50 x 12	B x 4	C x 8
D M6 x 22 x 4	E x 4	F x 1

4/7

2643/ALLOS/280726/

1

2	3	A	C	F
x 1	x 1	M6 x 50 x 4	x 4	x 1

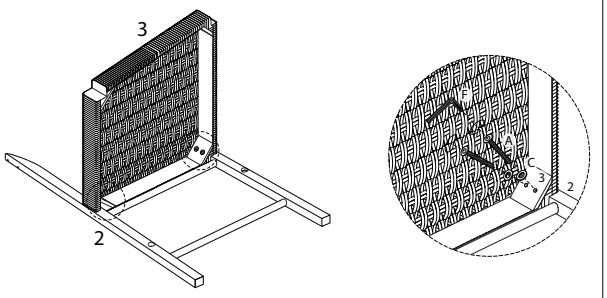

2

5	6	A	B	F
x 1	x 1	M6 x 50 x 2	x 2	x 1

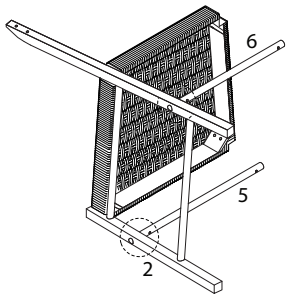

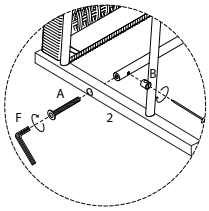

3

1	A	C	F
x 1	M6 x 50 x 4	x 2	x 1

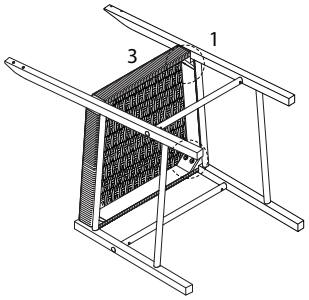

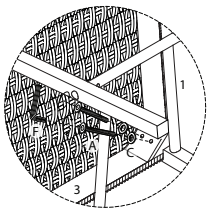

4

A	B	F
M6 x 50 x 2	x 2	x 1

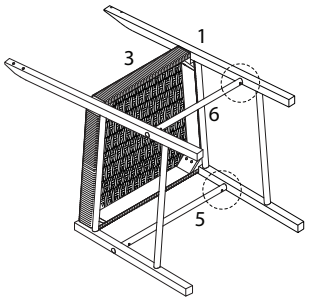

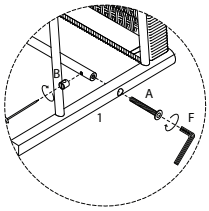

5

E
x 4

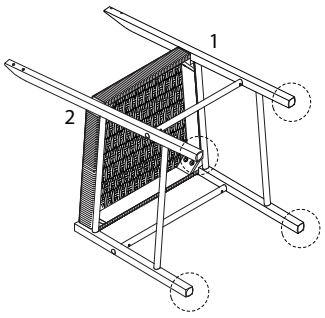

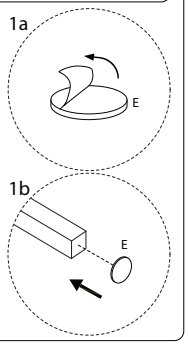

6

4	D	F
x 1	M6 x 22 x 4	x 1

