SOLETTA

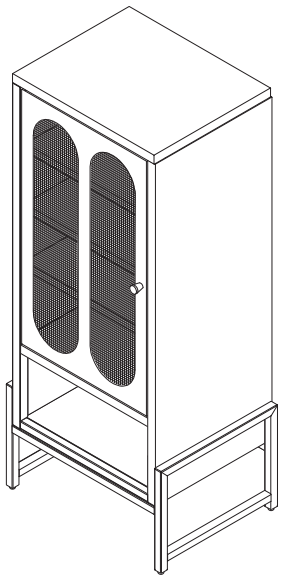

1/13

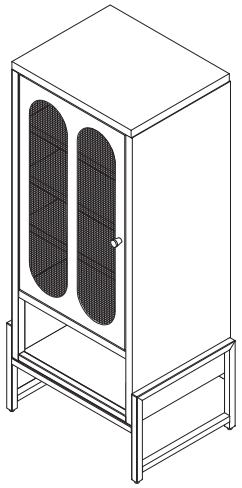

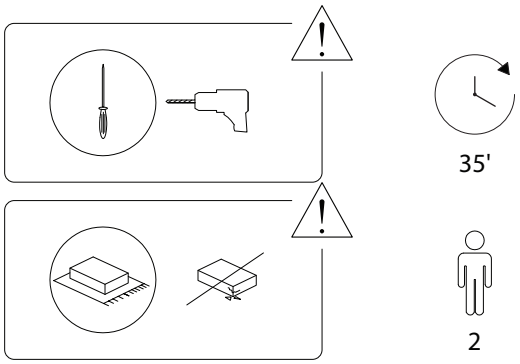

2/13

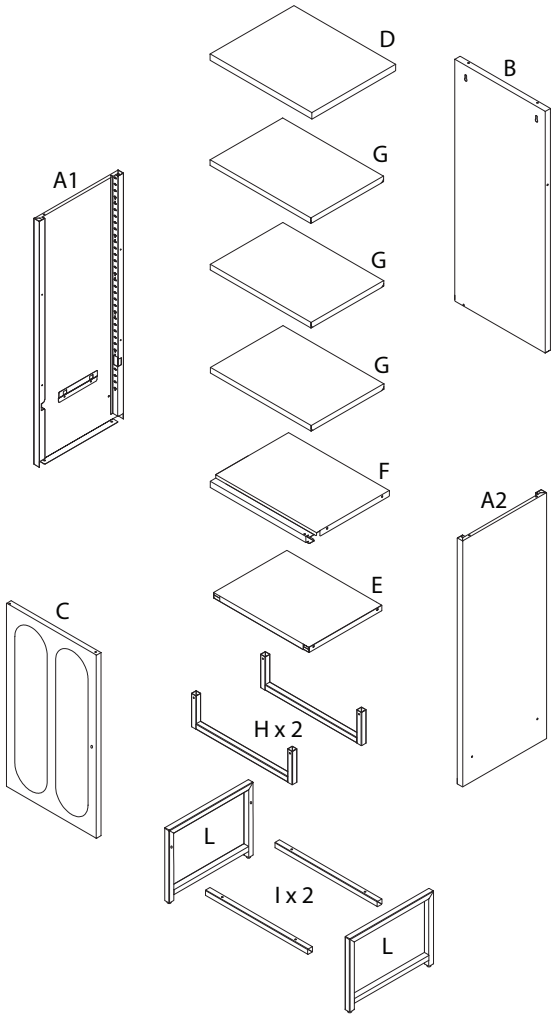

3/13

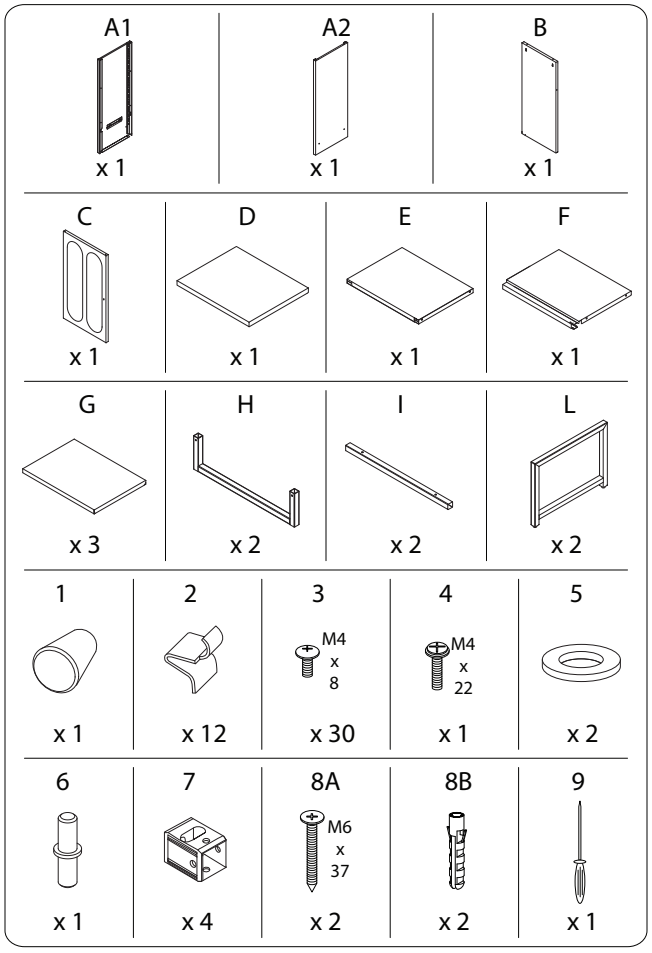

4/13

1

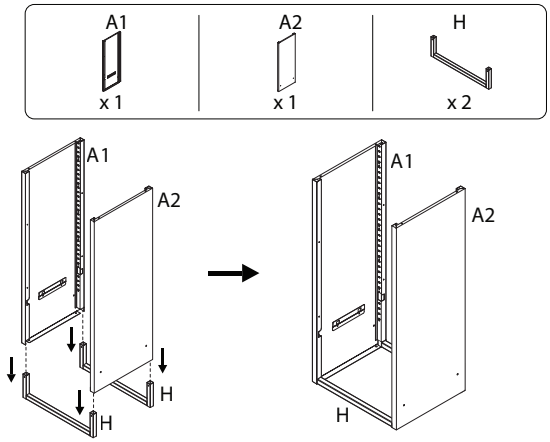

2

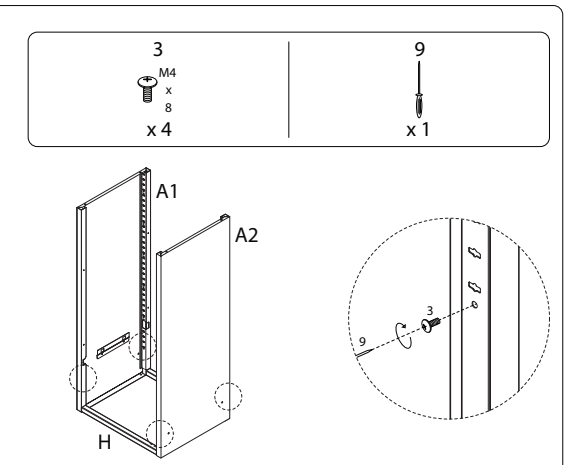

5/13

3

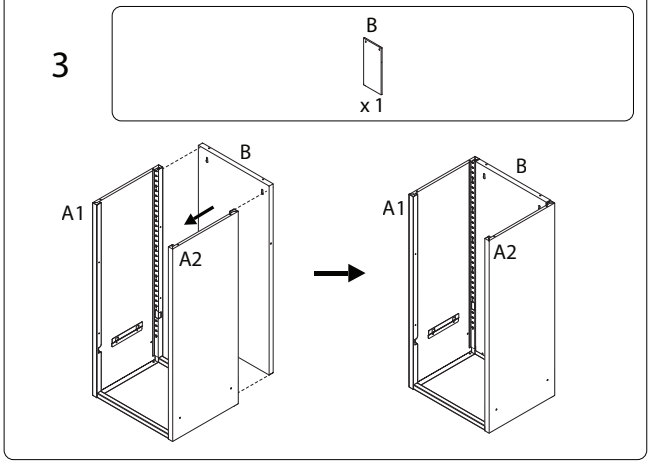

4

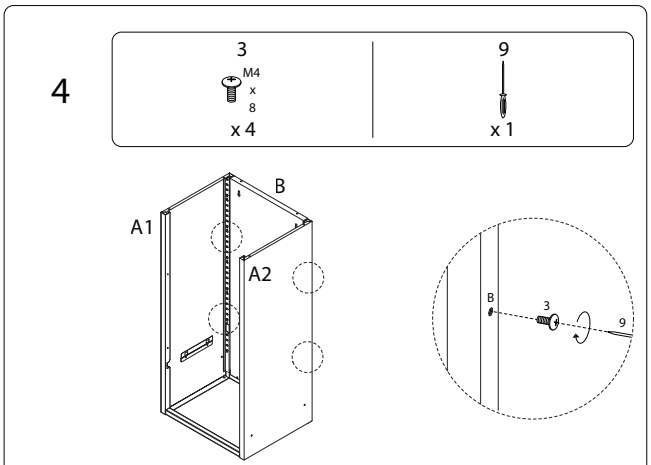

6/13

5

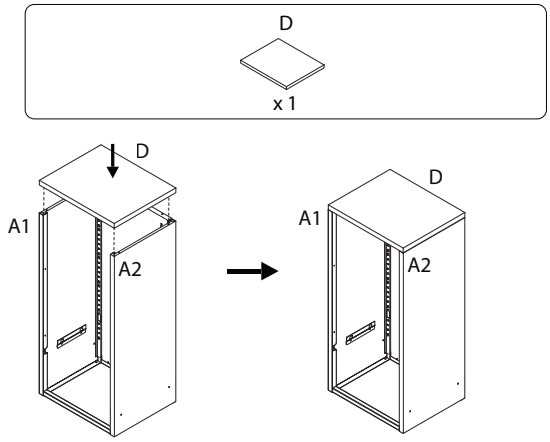

6

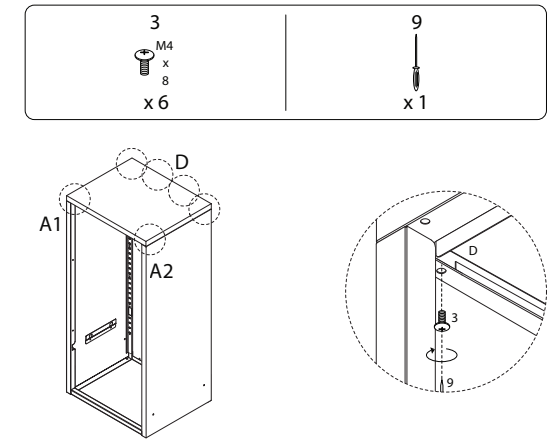

7/13

7

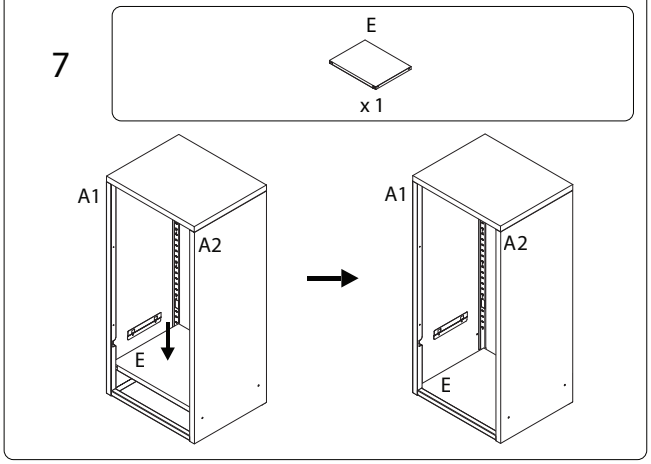

8

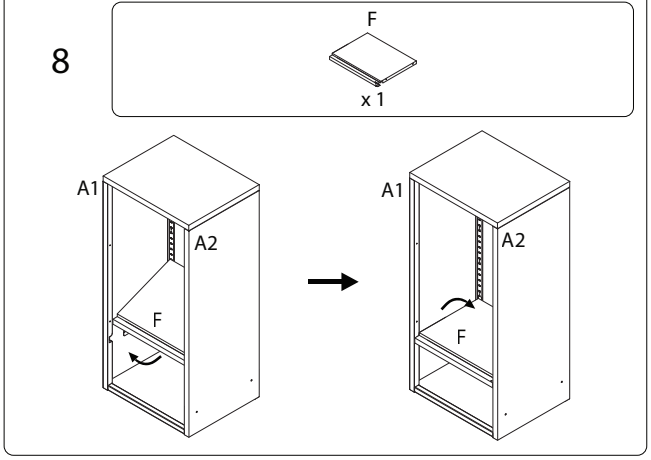

8/13

9 x 2

L	3	7	9
x 1	x 2	x 2	x 1

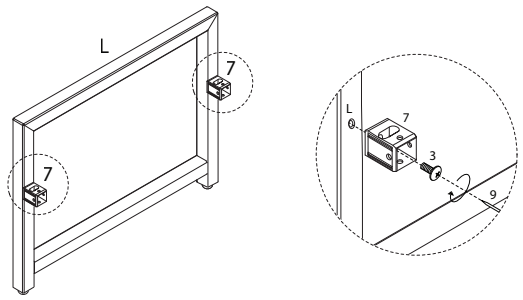

10

I
x 2

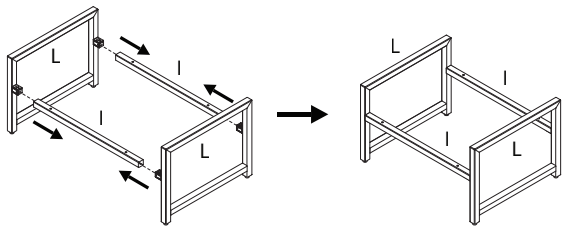

9/13

11

3	9
x 4	x 1

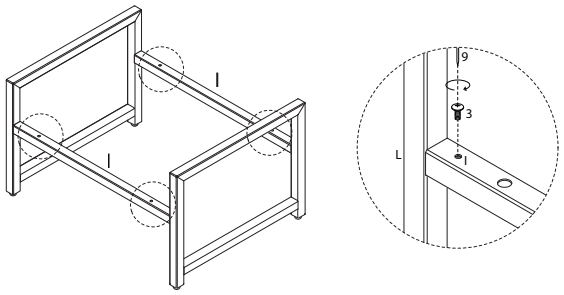

12

3	9
x 8	x 1

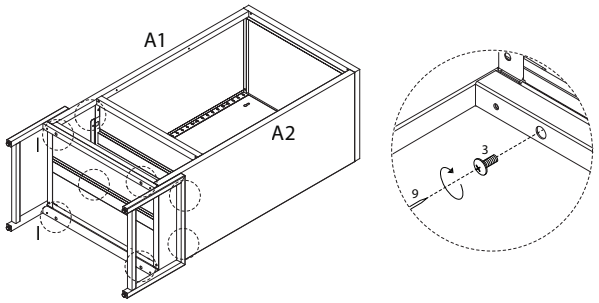

10/13

13

2
x 12

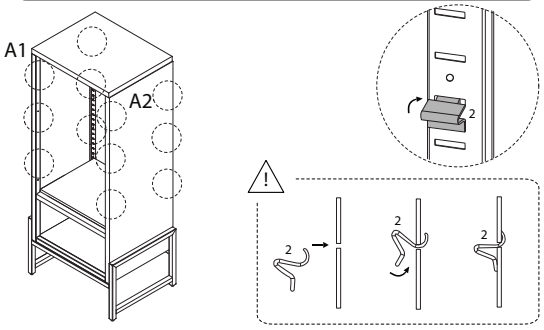

14

G
x 3

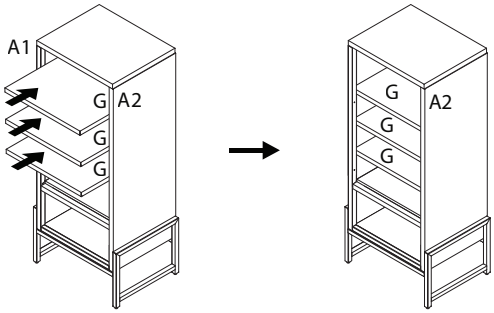

11/13

15

C	5	6
x 1	x 1	x 1

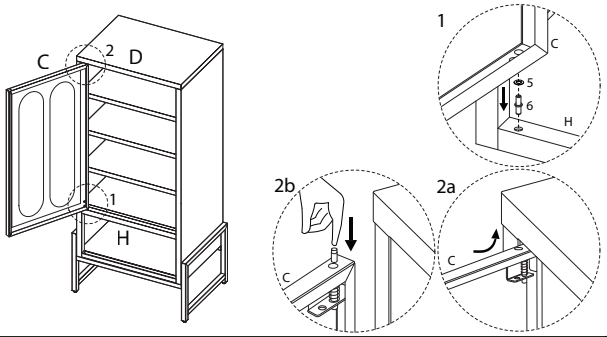

16

1	4	5	9
x 1	x 1	x 1	x 1

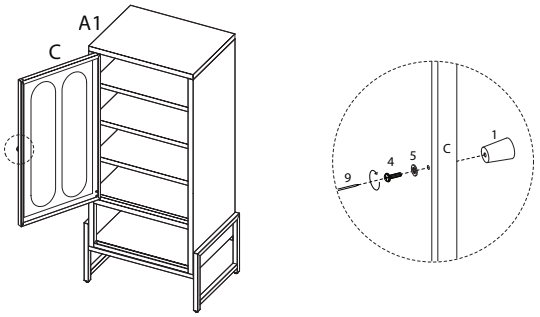

12/13

17

8A	8B	9
M6 x 37		
x 2	x 2	x 1

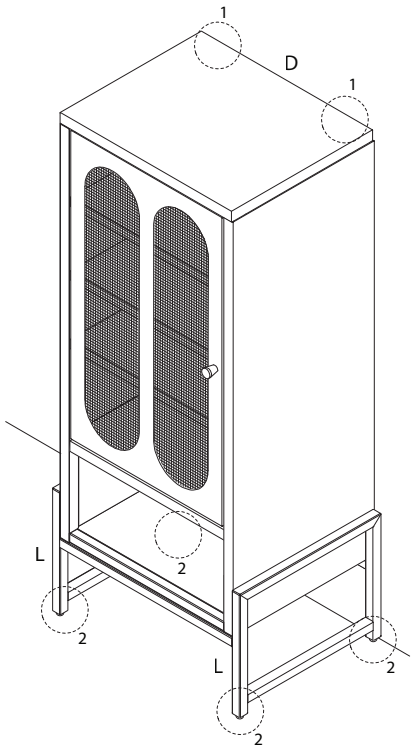

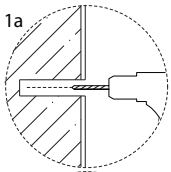

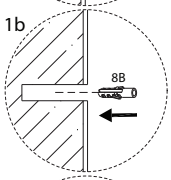

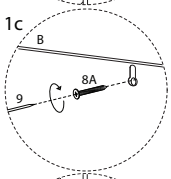

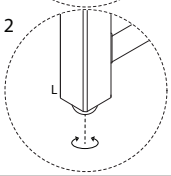

1914/SOLETTA/160426/