BRADLEY

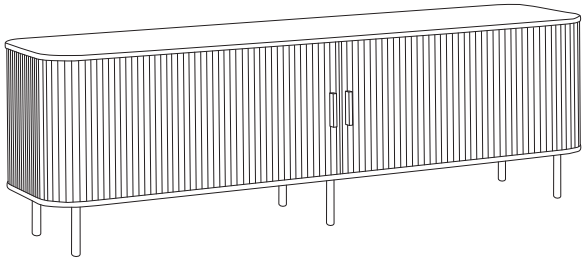

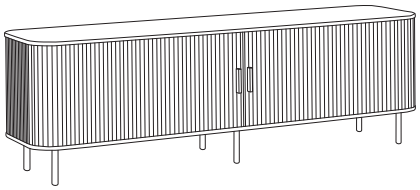

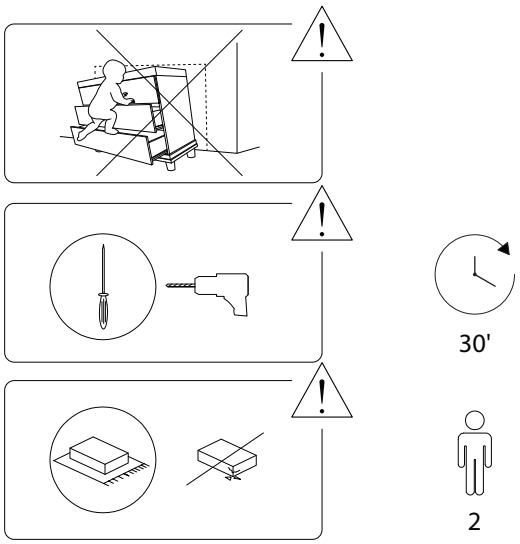
30'
2

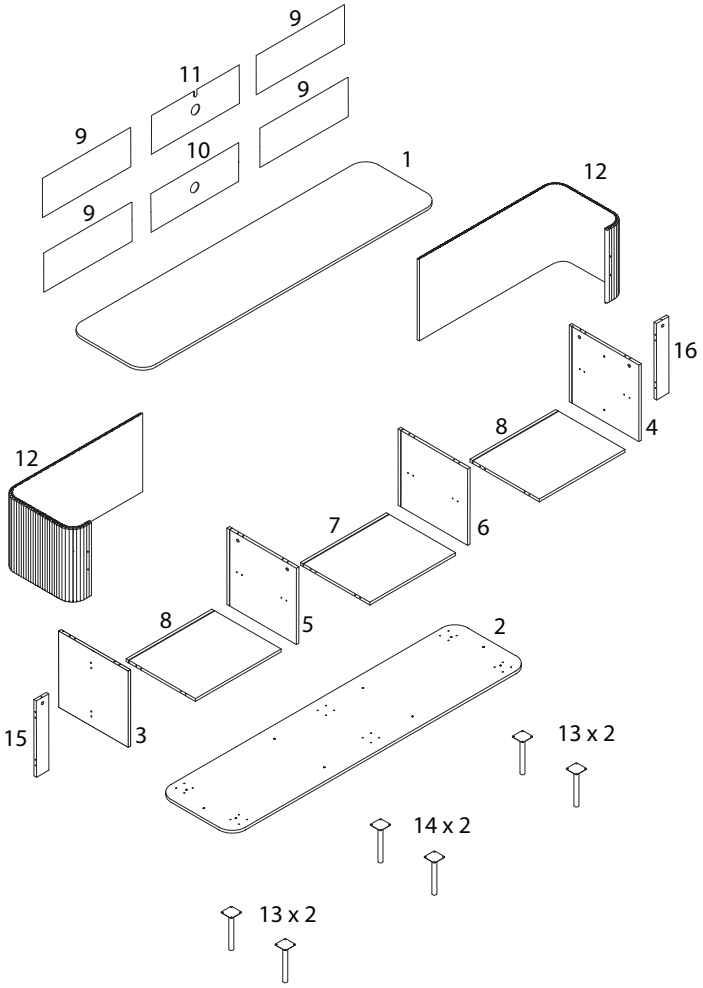
9
11
9
9
10
1
12
9
16
8
4
12
7
6
8
5
2
15
3
13 x 2
14 x 2
13 x 2

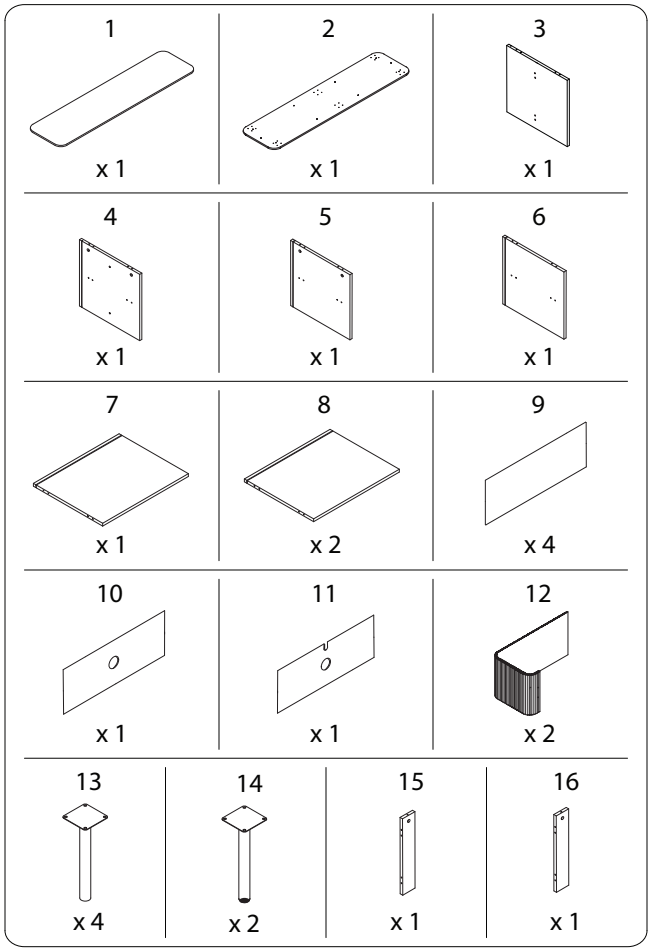
1
x 1
2
x 1
3
x 1
4
x 1
5
x 1
6
x 1
7
x 1
8
x 2
9
x 4
10
x 1
11
x 1
12
x 2
13
x 4
14
x 2
15
x 1
16
x 1

A	B	C
M4 x 35		
x 15	x 22	x 22
D	**E**	**F**
		M4 x 25
x 32	x 2	x 4
G	**H**	**I**
	M4 x 14	M3 x 16
x 1	x 25	x 16
J	**K**	
x 16	x 1	

1

3	4	B	D
x 1	x 1	x 4	x 4

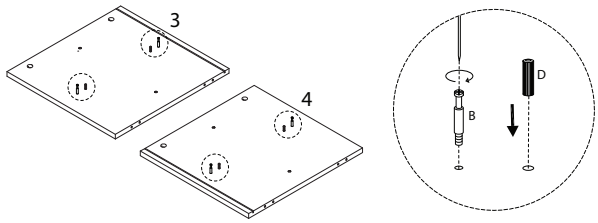

2

5	B	D
x 1	x 2	x 2

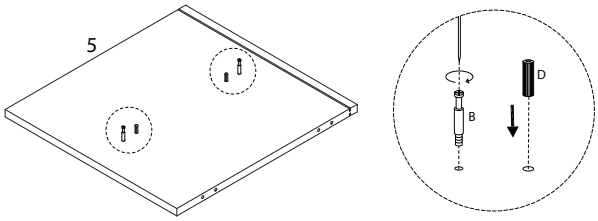

3

B	D
x 2	x 2

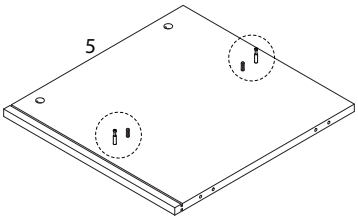

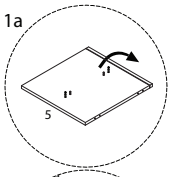

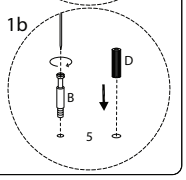

4

6	B	D
x 1	x 2	x 2

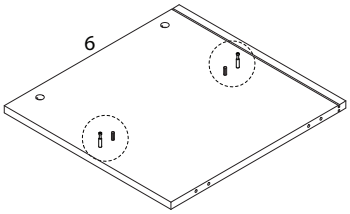

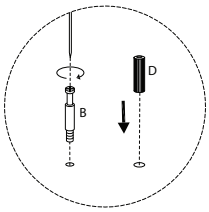

5

B	D
x 2	x 2

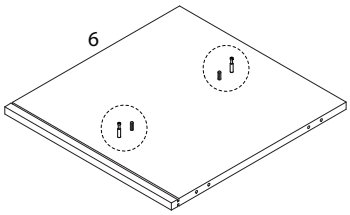

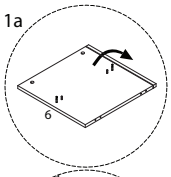

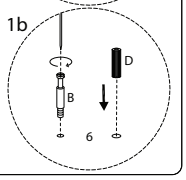

6

15	D
x 1	x 2

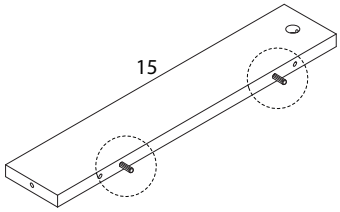

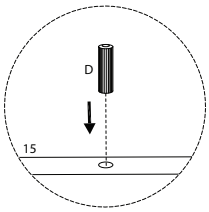

7

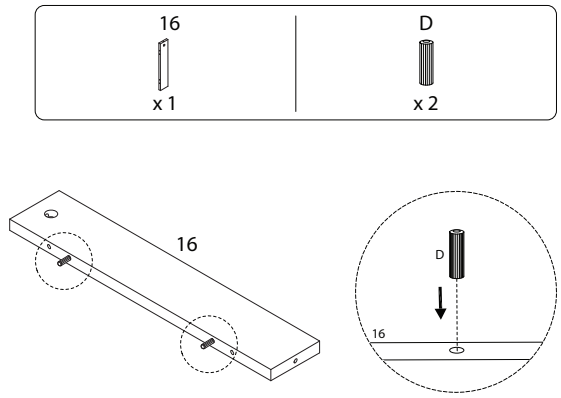

8

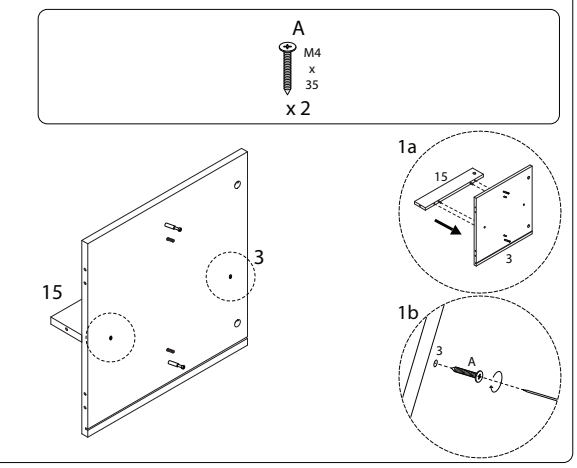

9

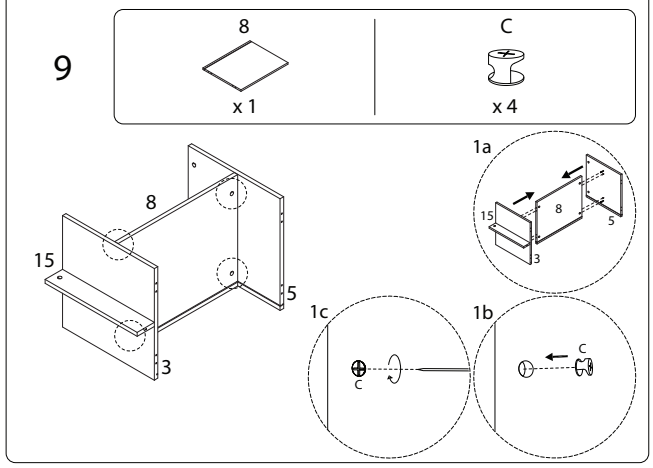

10

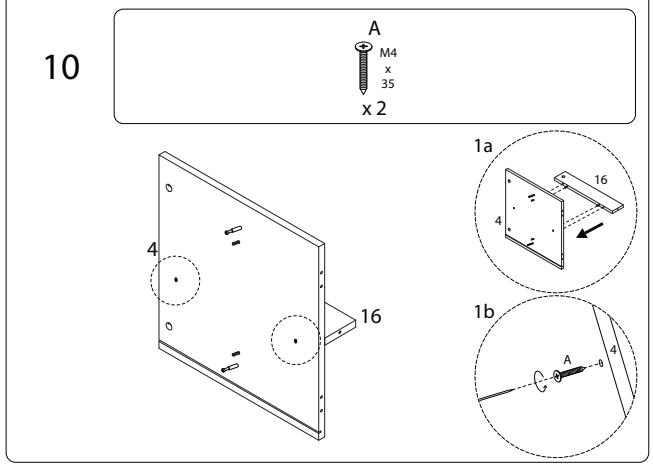

11

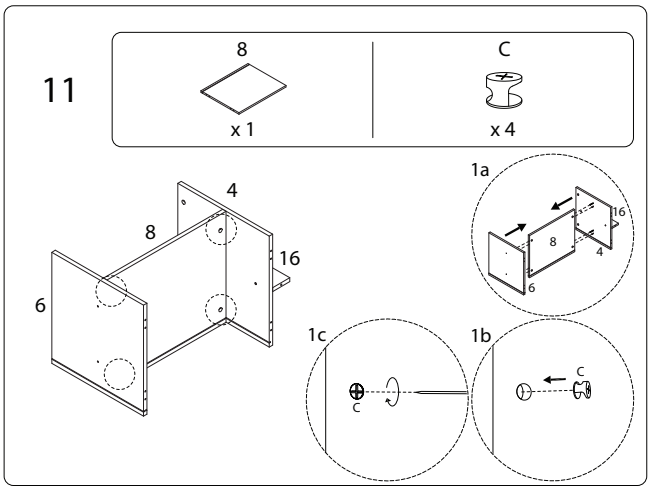

12

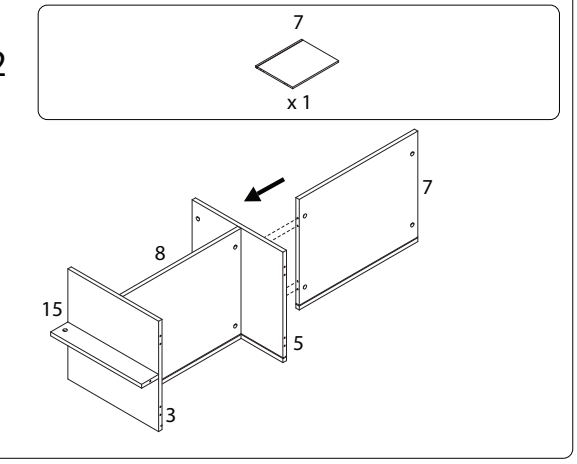

13

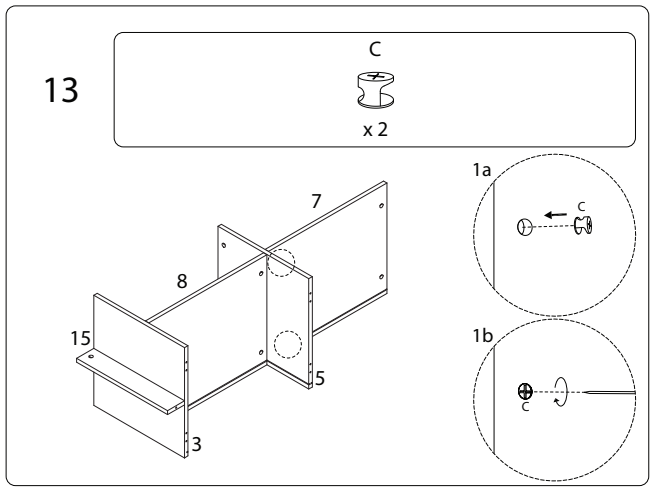

14

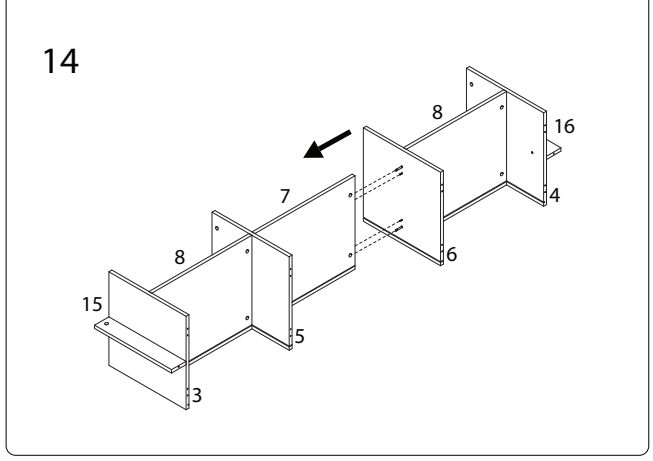

15

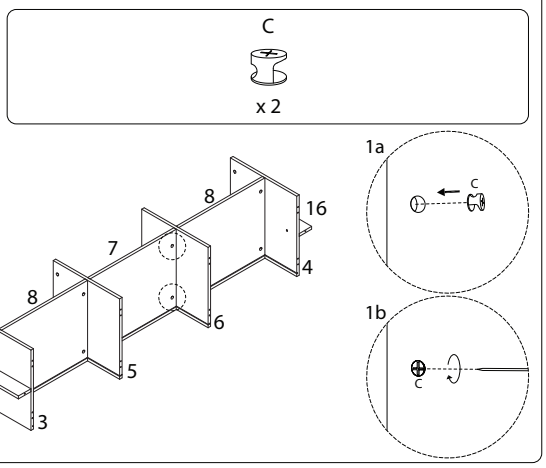

16

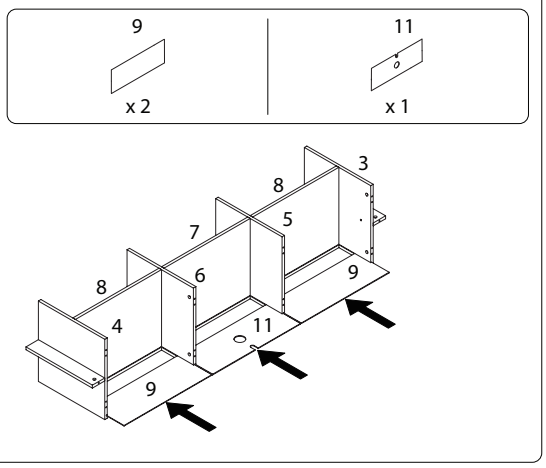

17

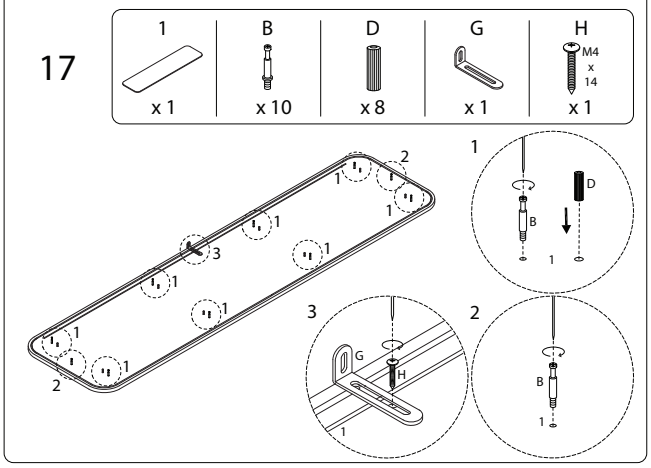

18

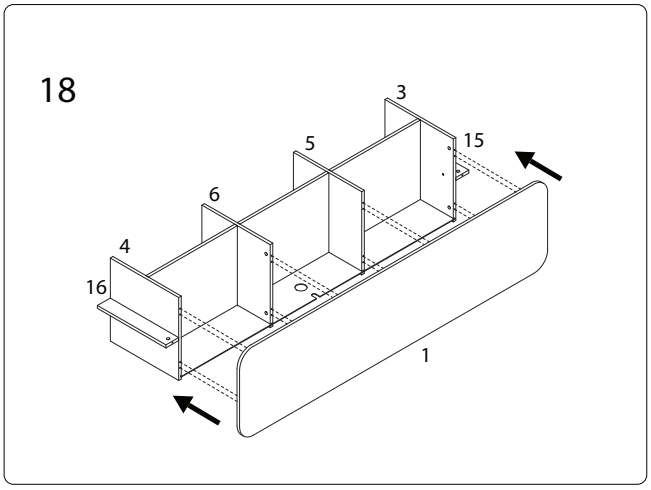

19

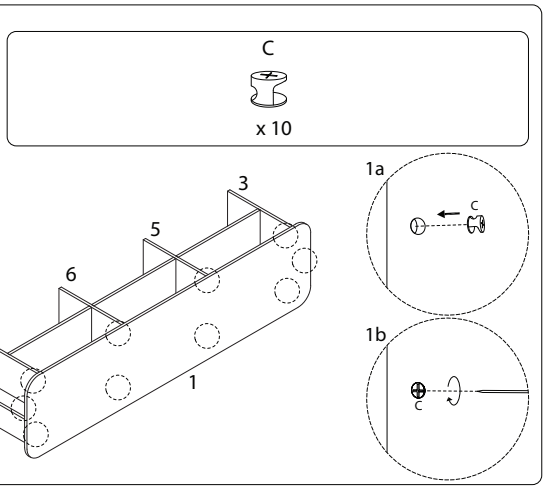

21 x 2

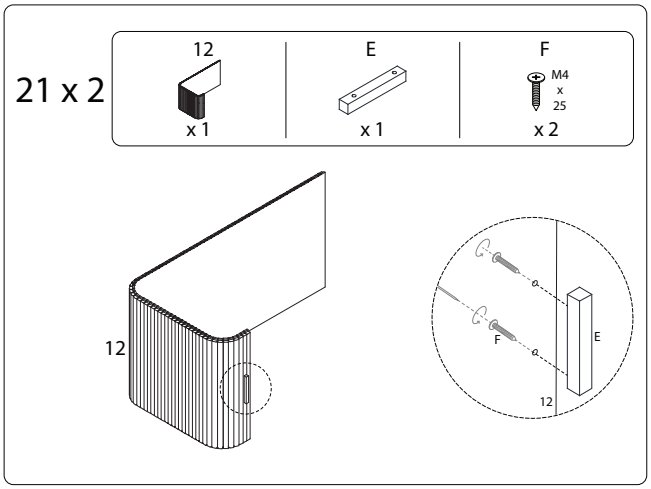

20

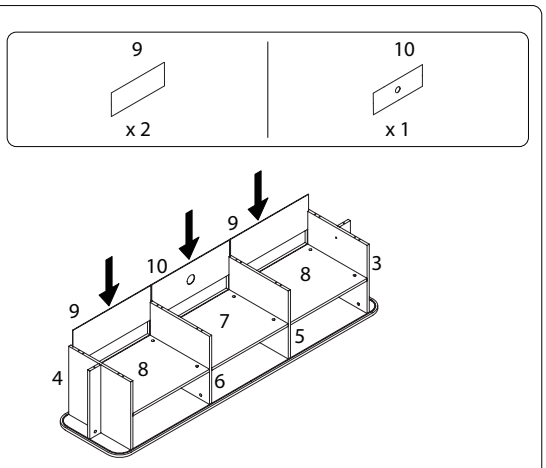

22

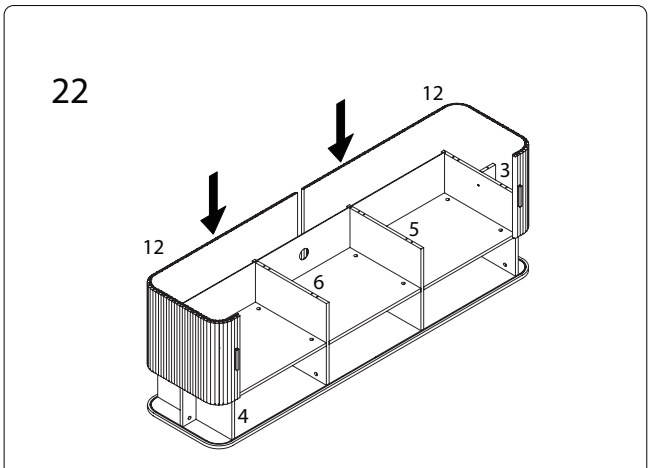

23

D
x 8

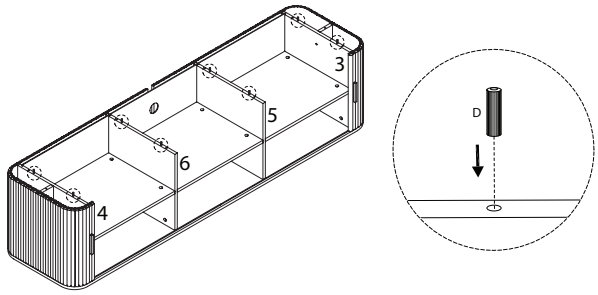

24

2
x 1

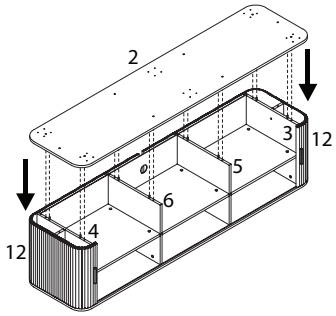

25

A
M4 x 35
x 10

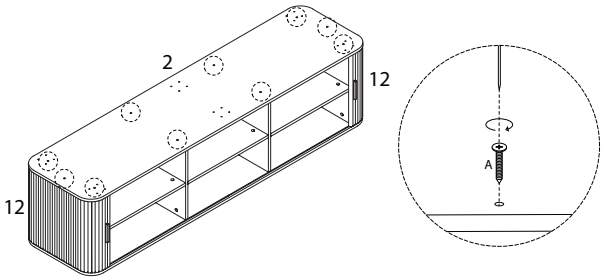

26

13	14	H
x 4	x 2	x 24

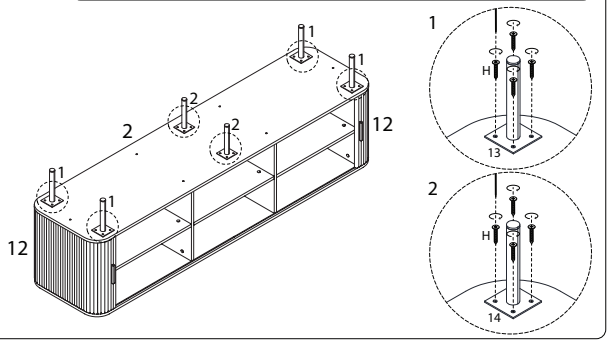

27

I	J
M3 x 16	
x 16	x 16

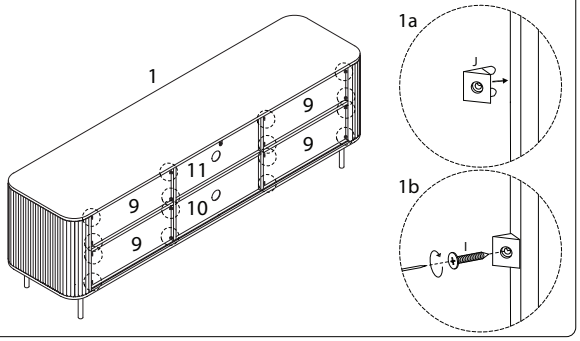

28

A	K
M4 x 35	
x 1	x 1

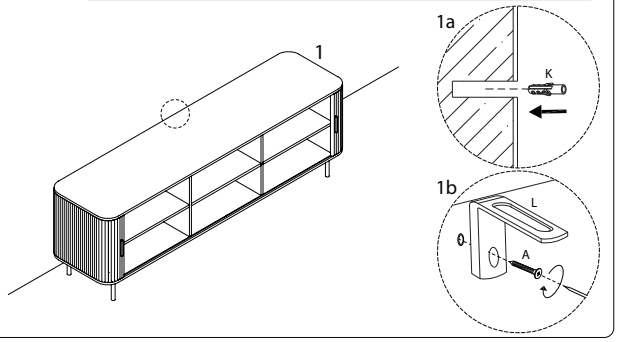
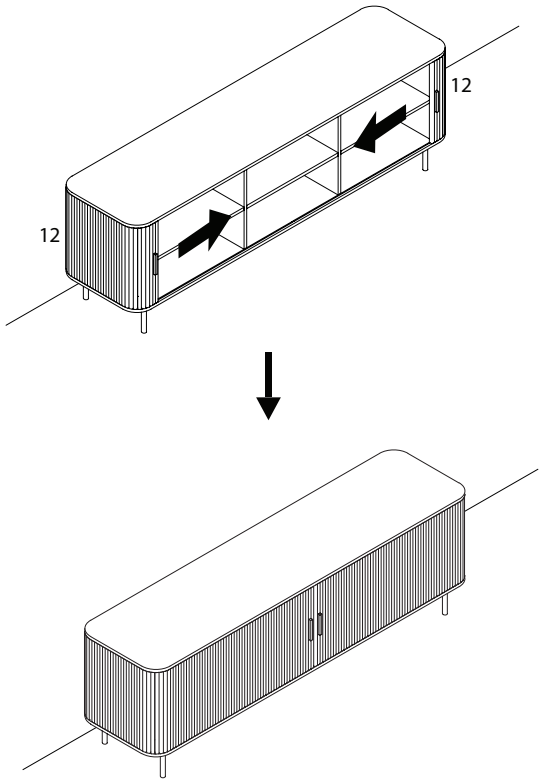
29