COSTELLO

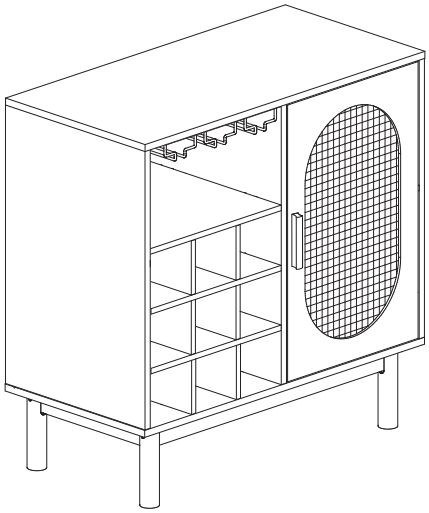

1/19

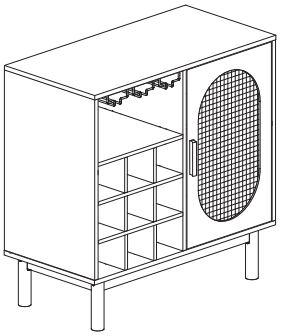

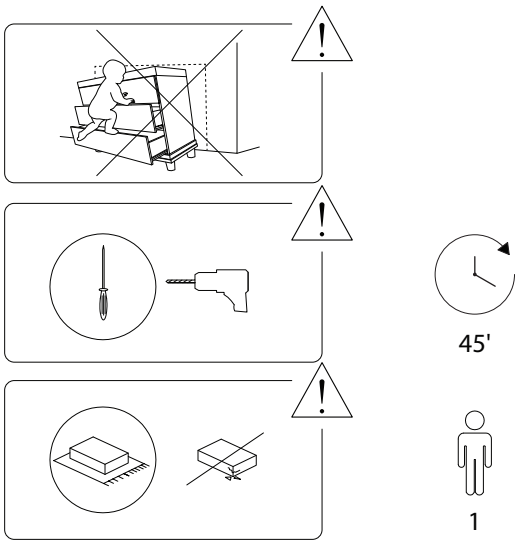

2/19

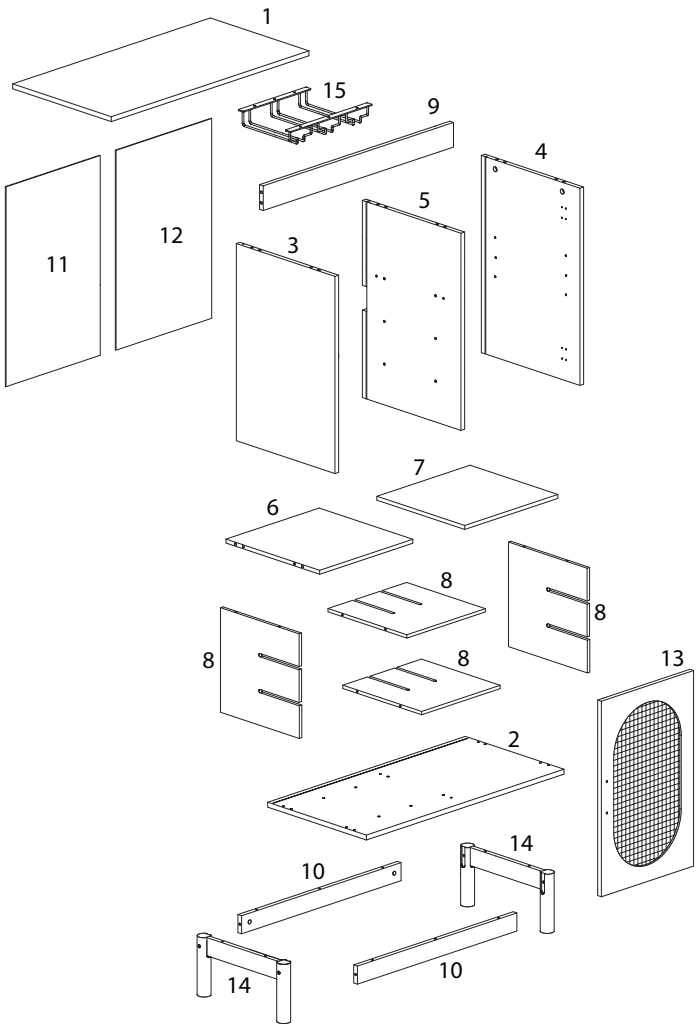

3/19

1 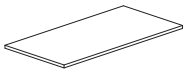 x 1	2 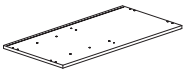 x 1	3  x 1
4 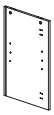 x 1	5  x 1	6 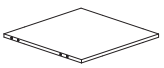 x 1
7 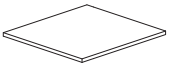 x 1	8 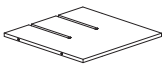 x 4	9  x 1
10 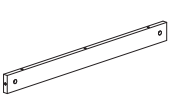 x 2	11 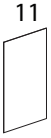 x 1	12 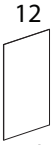 x 1
13 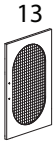 x 1	14  x 2	15 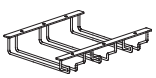 x 1

4/19

1658/COSTELLO/300126/

A	B	C
		
x 14	x 14	x 32

D	E	F	G
 M4 x 12	 M4 x 35	M4 x 45	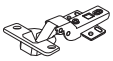
x 12	x 10	x 10	x 2

H	I	J	K
	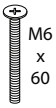 M6 x 60		
x 4	x 4	x 4	x 2

L	M	N	O
		 M4 x 12	 M4 x 25
x 4	x 2	x 8	x 2

P	Q	R	S
			 M3 x 14
x 1	x 4	x 8	x 8

1

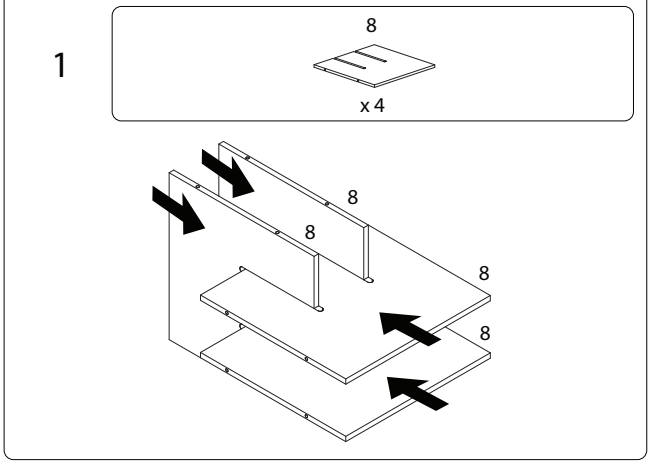

2

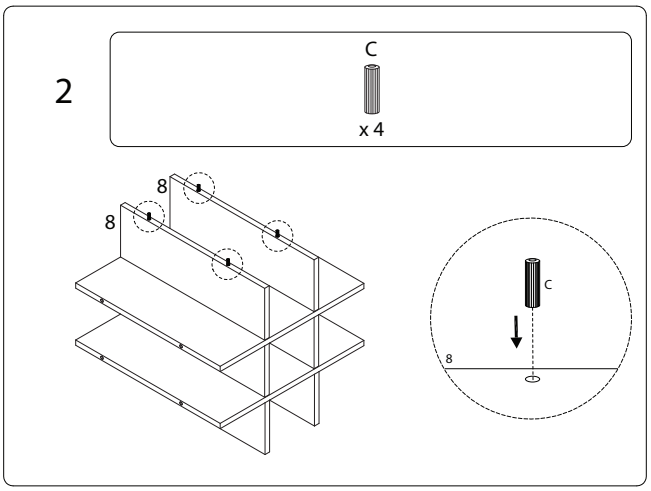

3

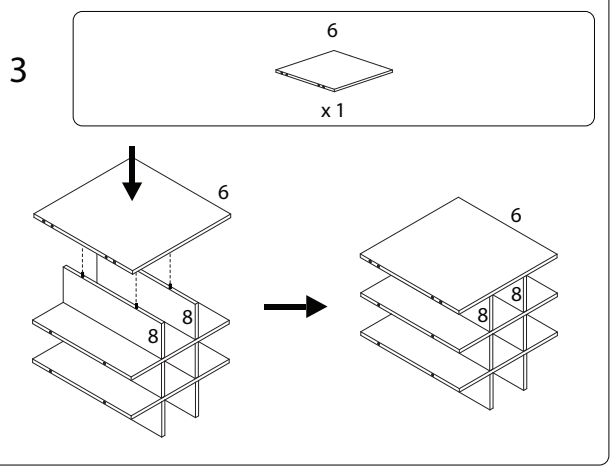

5

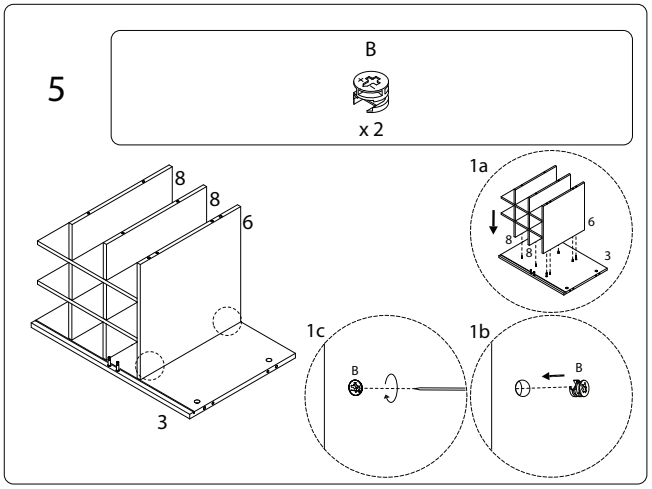

4

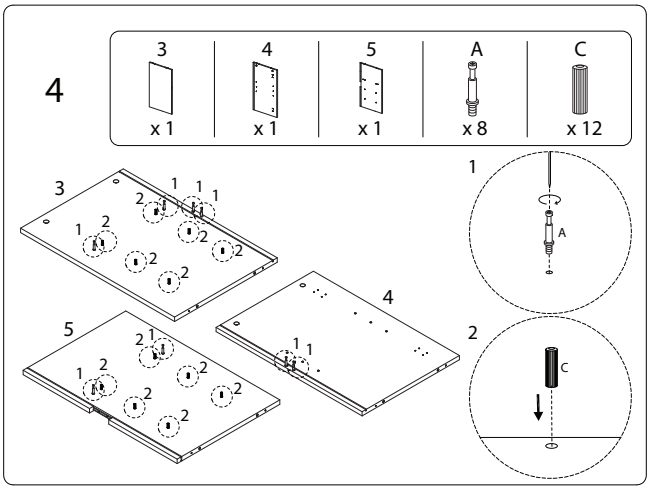

6

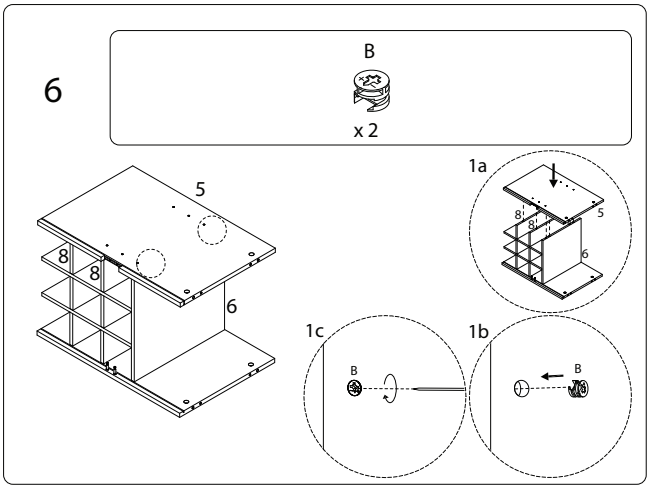

7

9 x 1

B x 2

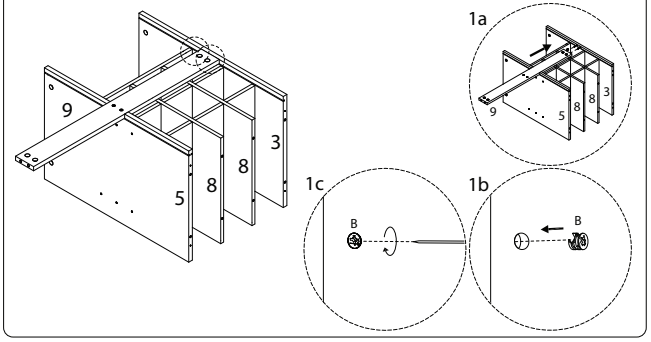

8

E M4 x 35 x 2

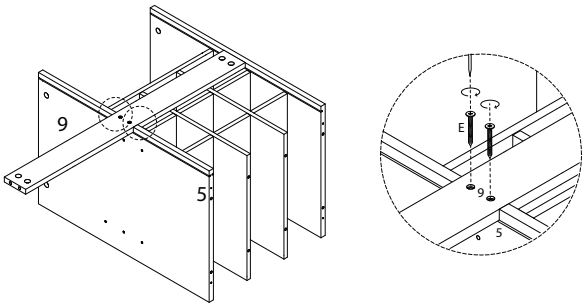

9

B x 2

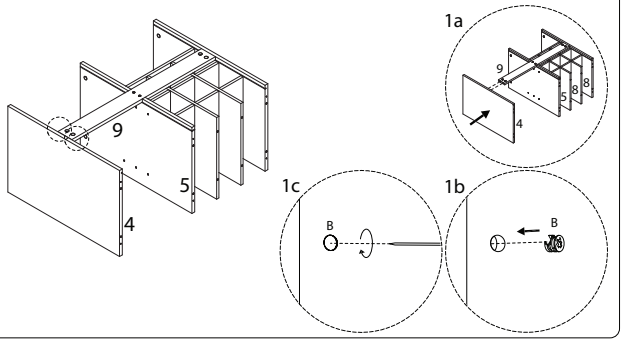

10

C x 10

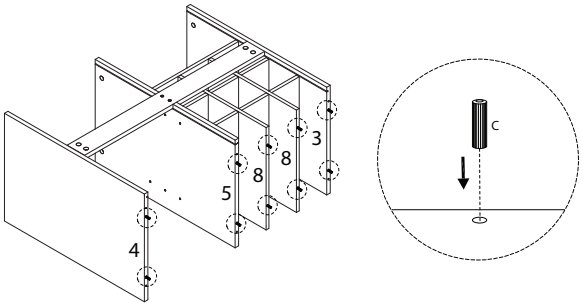

11

2 x 1

E M4 x 35 x 6

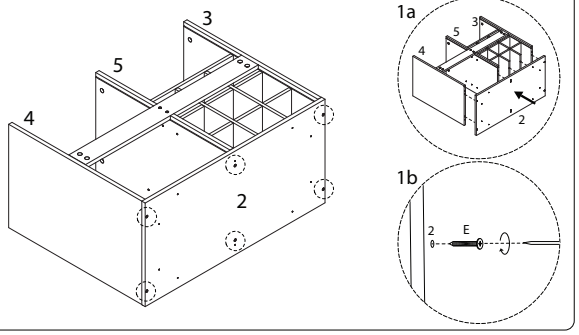

12

10 x 2

14 x 2

H x 4

I M6 x 60 x 4

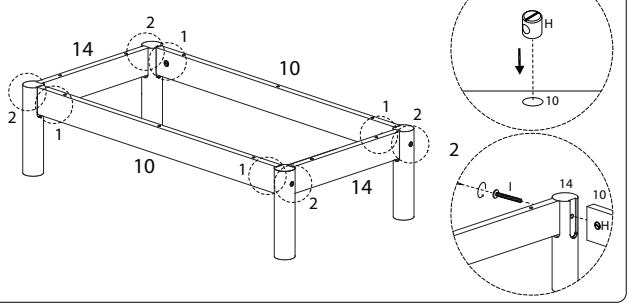

13

F M4 x 45 x 10

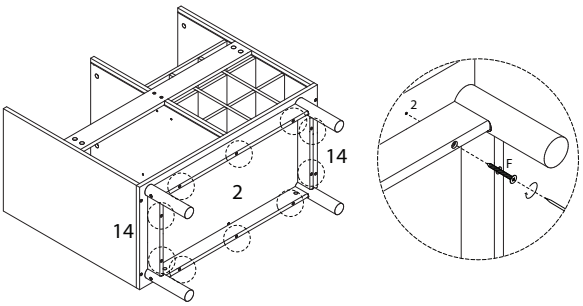

14

Q x 4

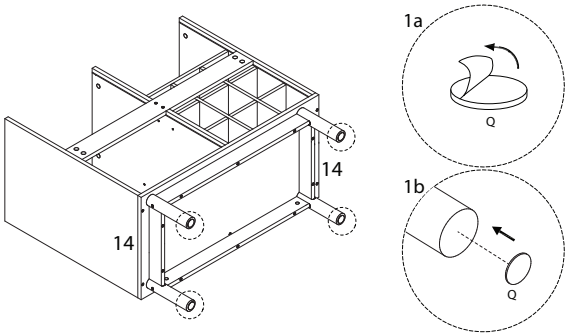

15

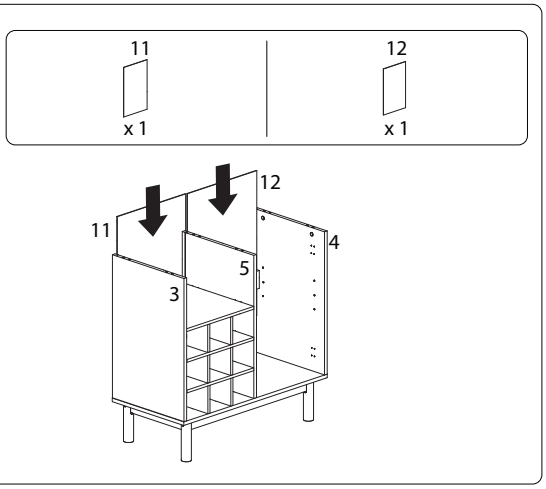

16

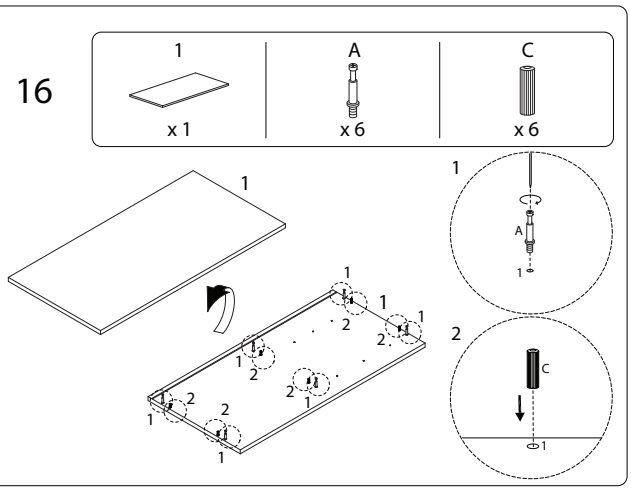

17

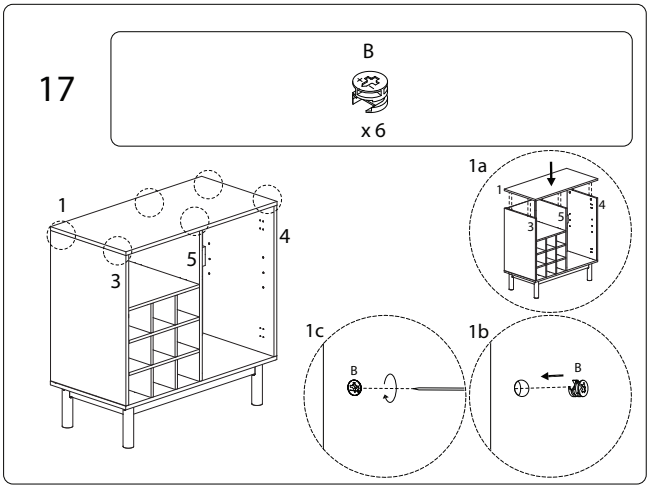

18

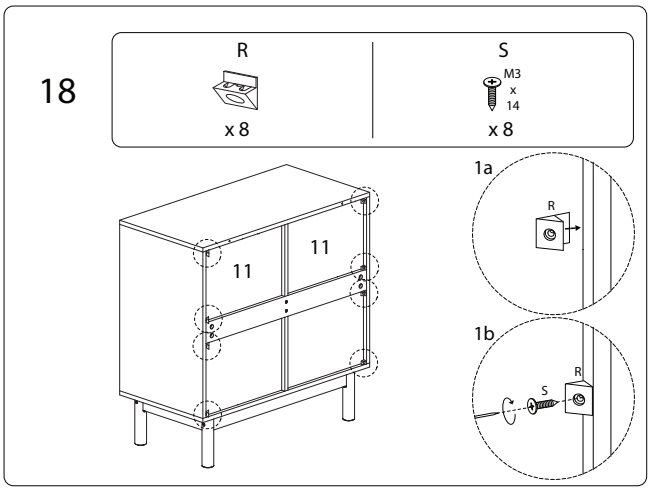

19

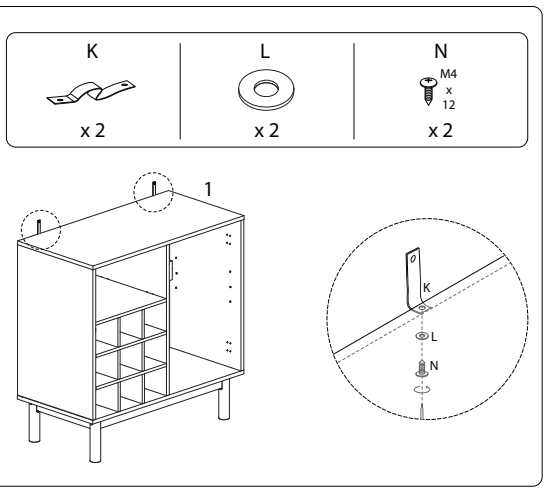

20

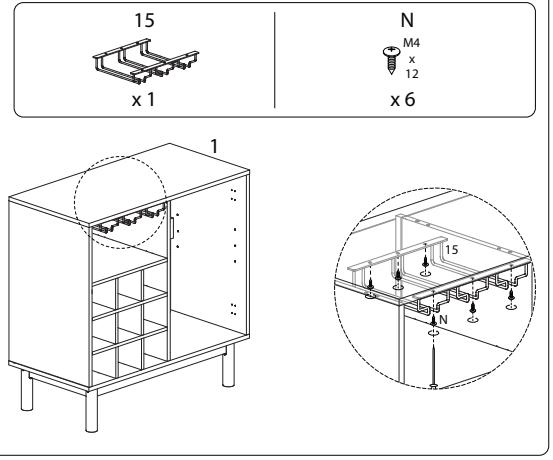

21

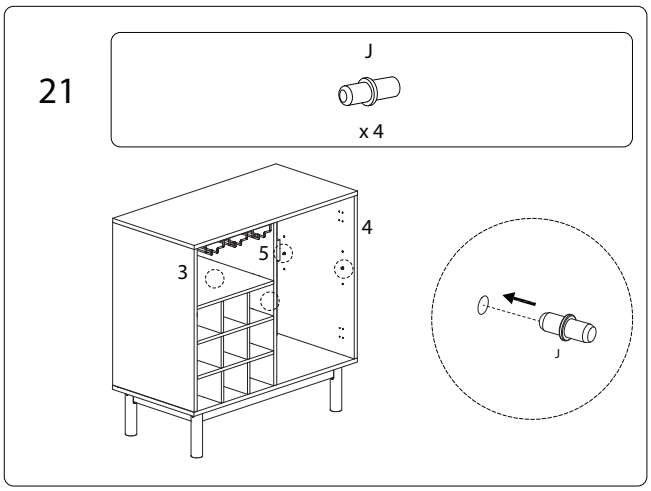

22

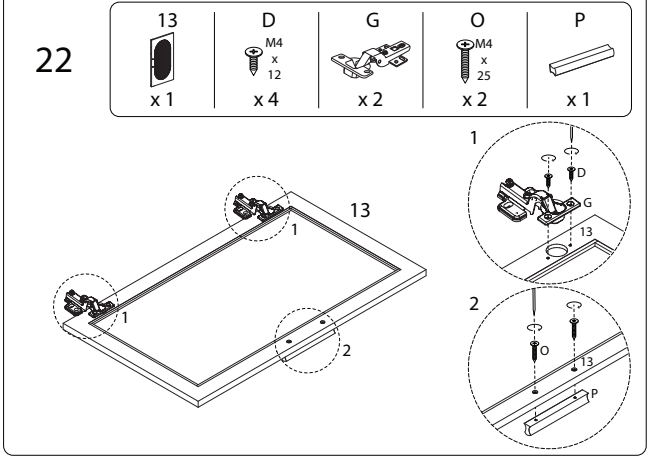

23

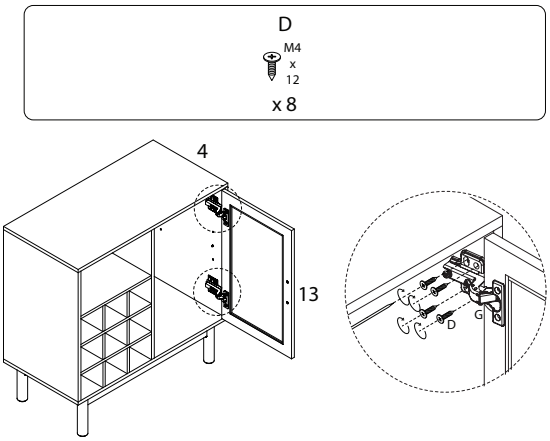

24

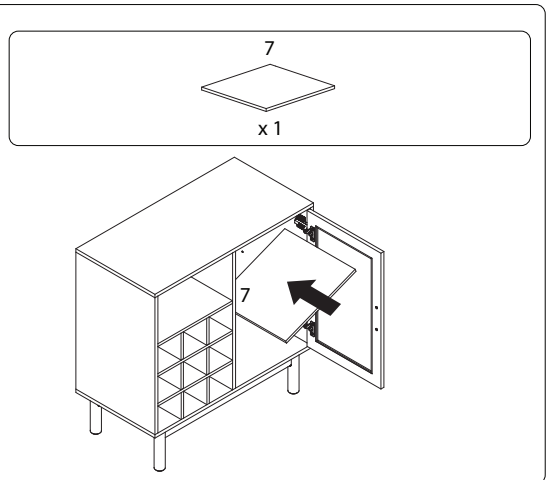

25

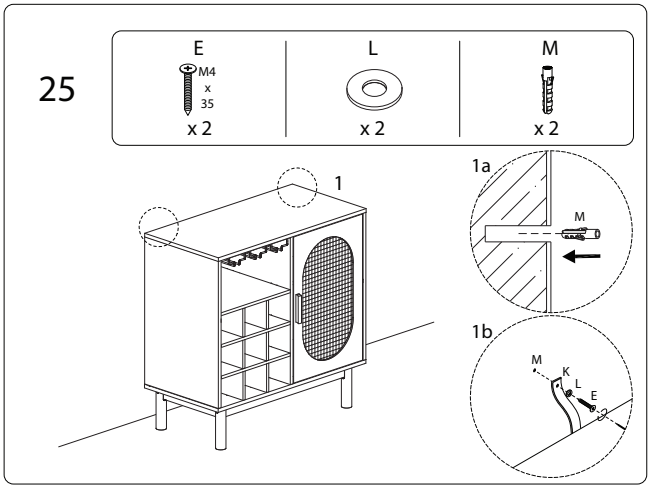

26

