DESTINES

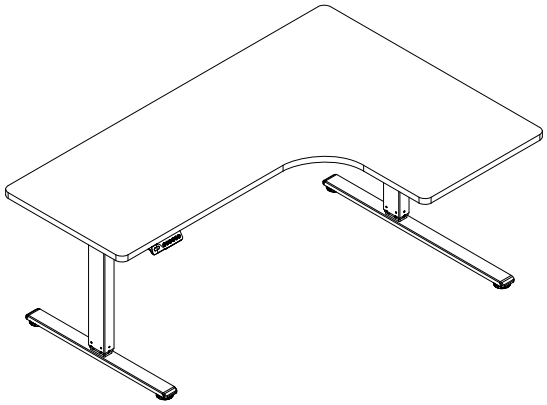

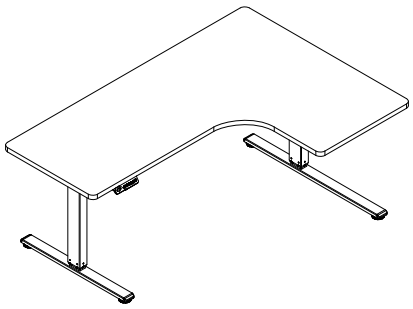

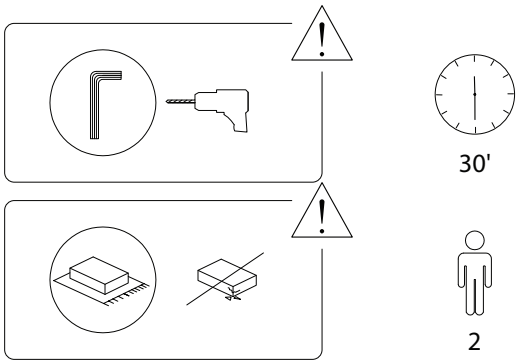
30'
2

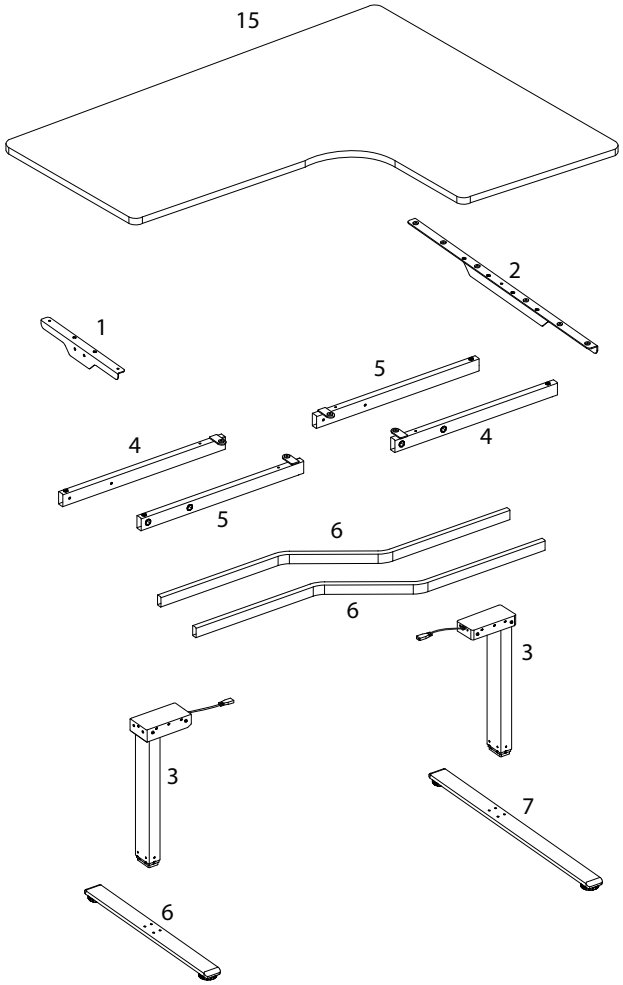
15
2
1
5
4
4
5
6
6
3
3
7
6

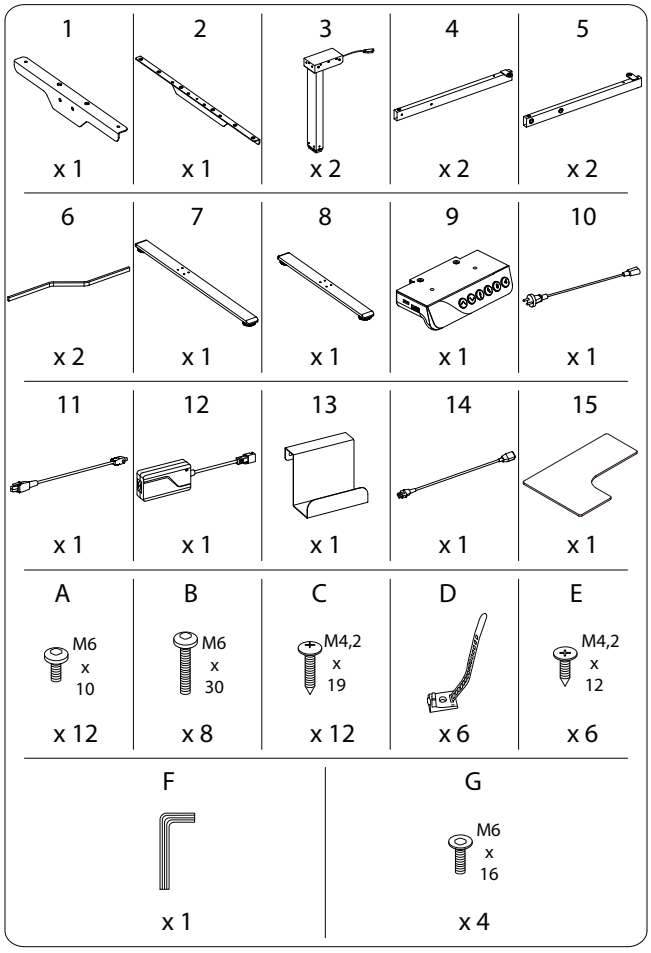
1
x 1
2
x 1
3
x 2
4
x 2
5
x 2
6
x 2
7
x 1
8
x 1
9
x 1
10
x 1
11
x 1
12
x 1
13
x 1
14
x 1
15
x 1
A
M6 x 10
x 12
B
M6 x 30
x 8
C
M4,2 x 19
x 12
D
x 6
E
M4,2 x 12
x 6
F
x 1
G
M6 x 16
x 4

1 x 2

3	4	5	A	F
x 1	x 1	x 1	M6 x 10 x 4	x 1

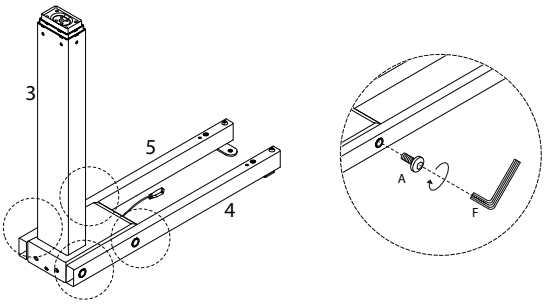

2

1	2	A	G	F
x 1	x 1	M6 x 10 x 4	M6 x 16 x 4	x 1

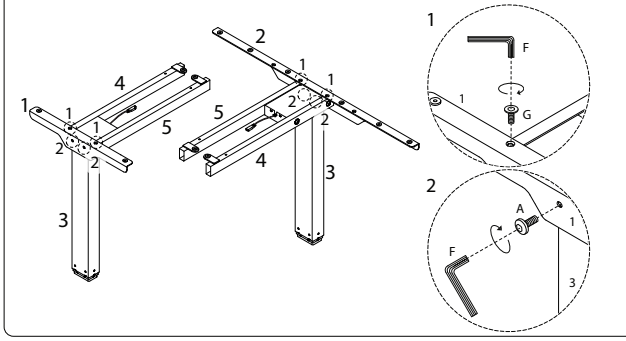

!

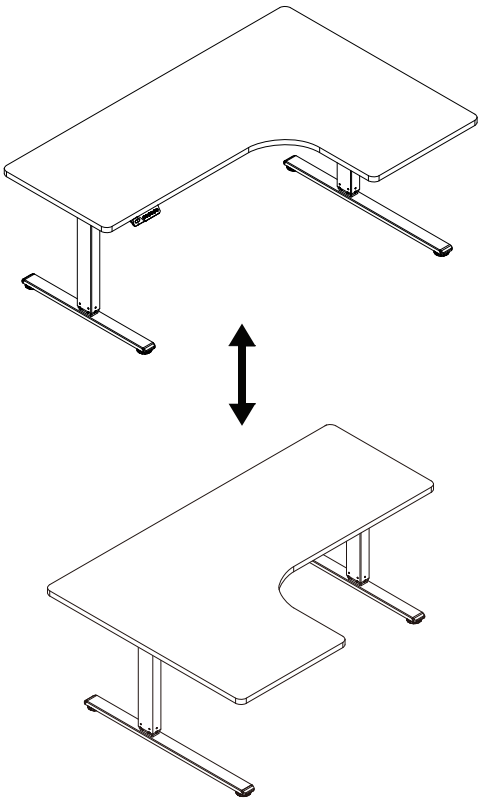

3

6
x 2

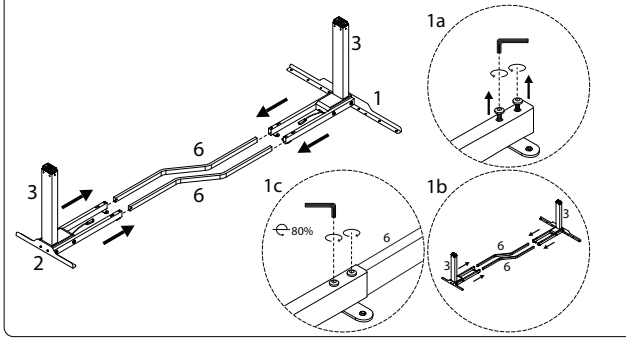

5

13	15
x 1	x 1

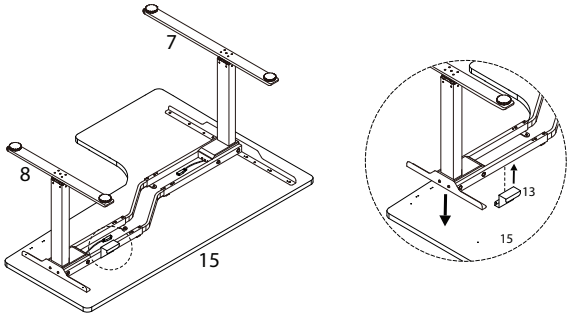

4

7	8	B	F
x 1	x 1	M6 x 30 x 8	x 1

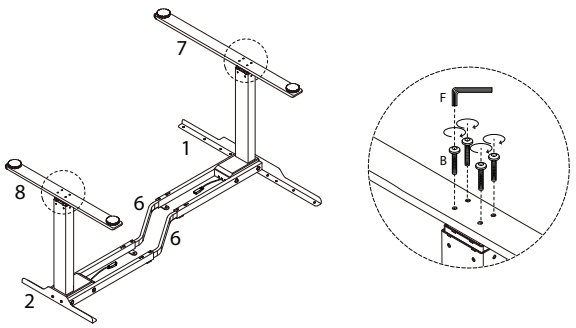

6

C
M4,2 x 19 x 8

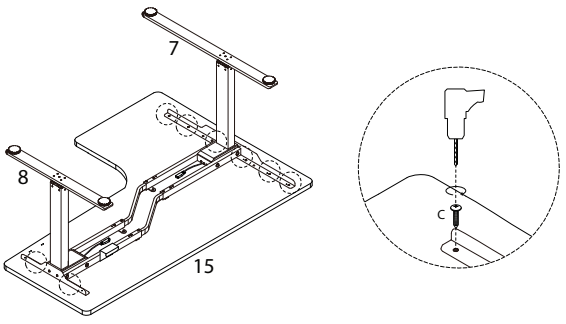

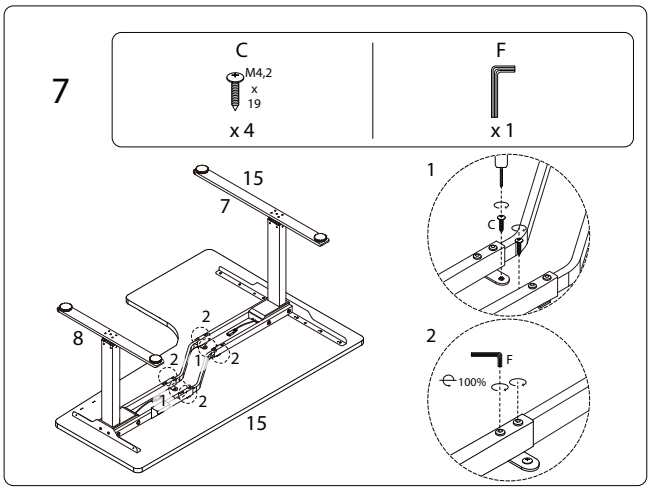
7
C
M4,2
x
19
x 4
F
x 1
15
7
8
2
1
2
2
1
2
15
1
C
2
F
100%

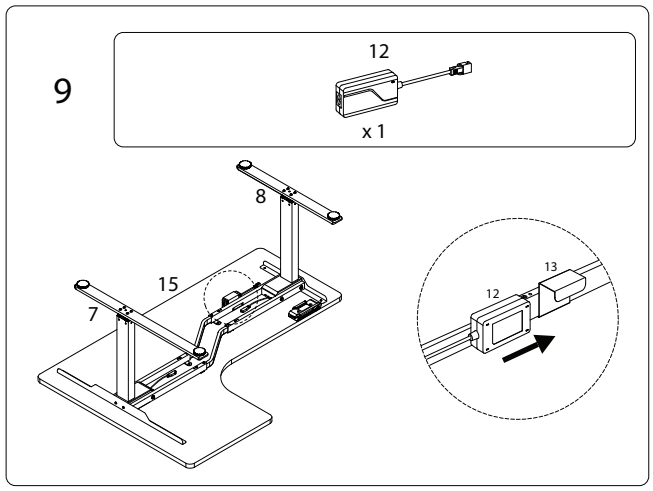
9
12
x 1
8
15
7
12
13

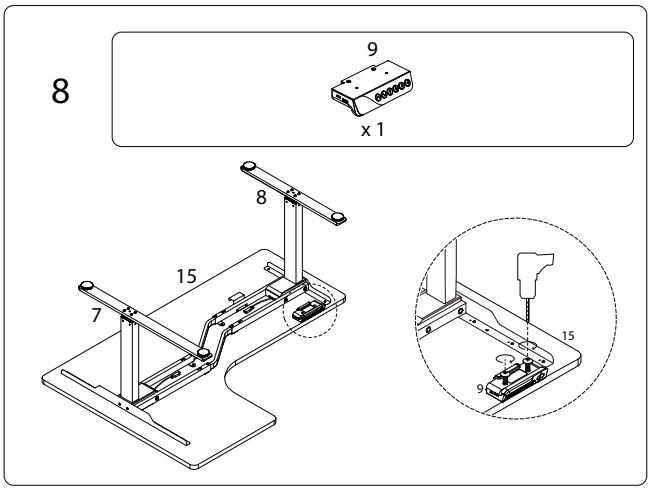
8
9
x 1
8
15
7
15
9

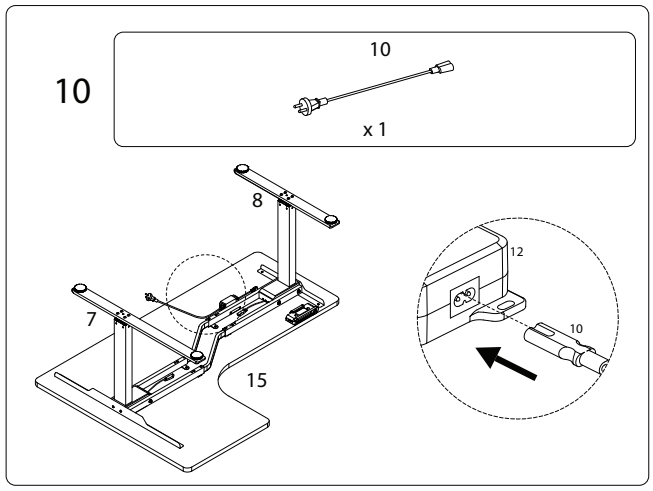
10
10
x 1
8
7
15
12
10

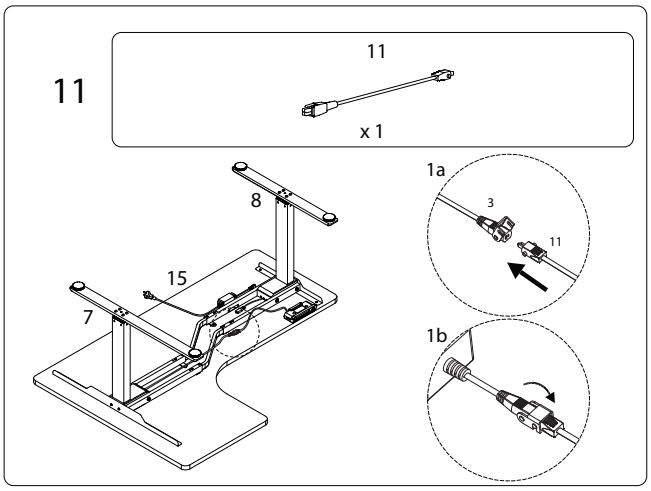
11
11
x 1
8
15
7
1a
3
11
1b

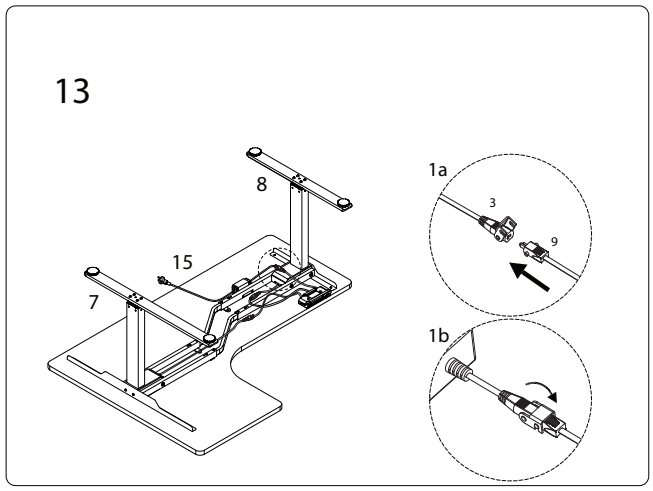
13
8
15
7
1a
3
9
1b

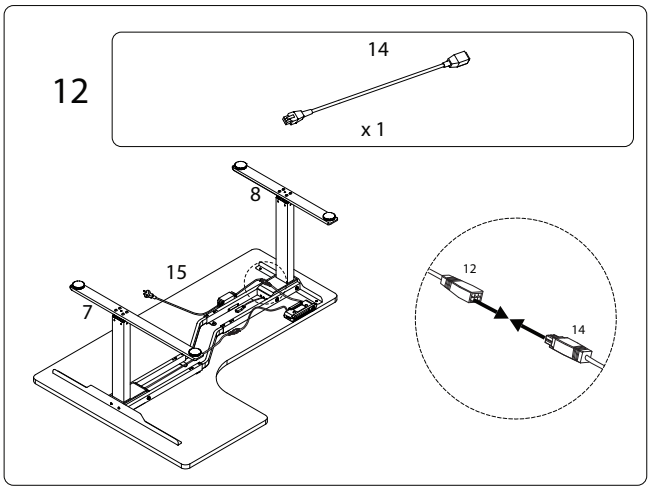
12
14
x 1
8
15
7
12
14

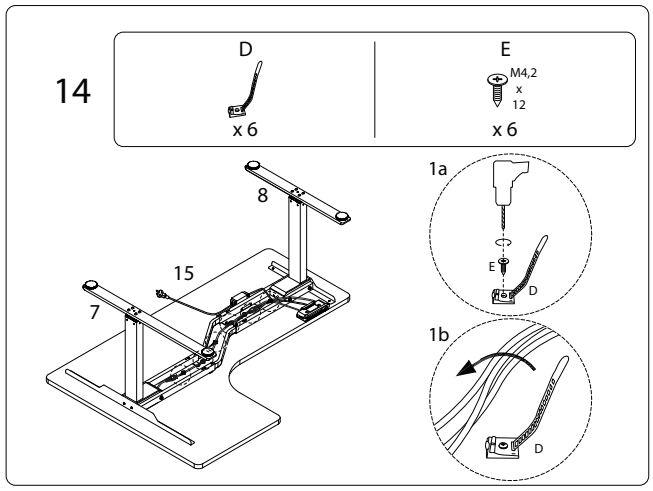
14
D
x 6
E
M4,2
x
12
x 6
8
15
7
1a
E
D
1b
D

13

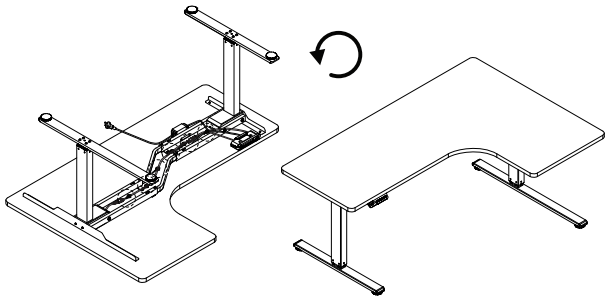

14

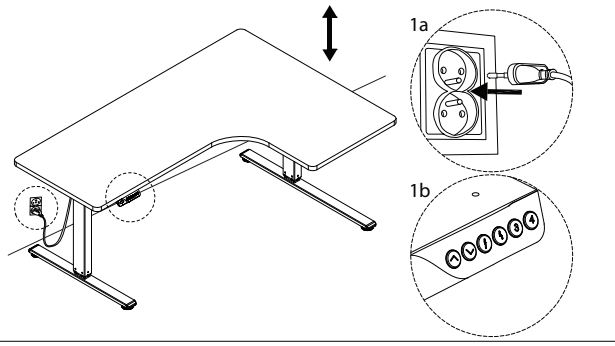

1956/DESTINES/190724/