GINNERUP

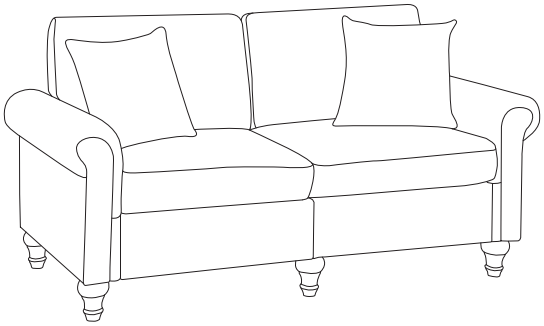

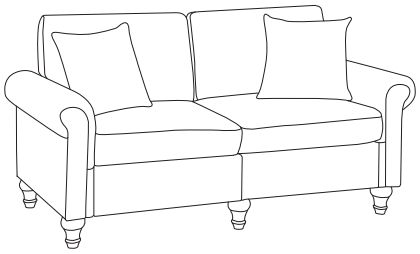

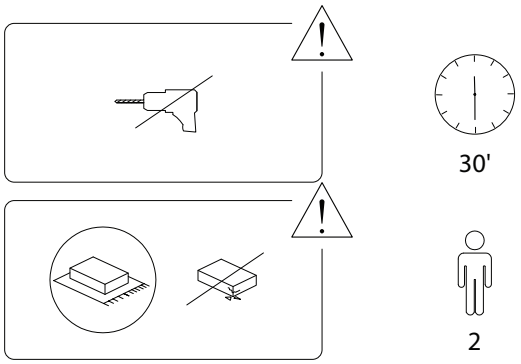

1/7

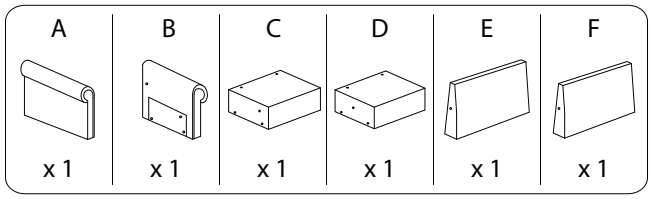

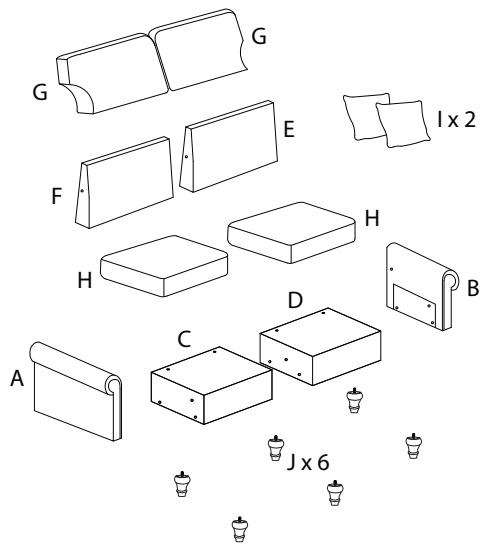

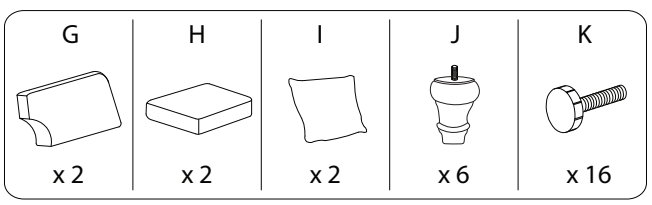

2/7

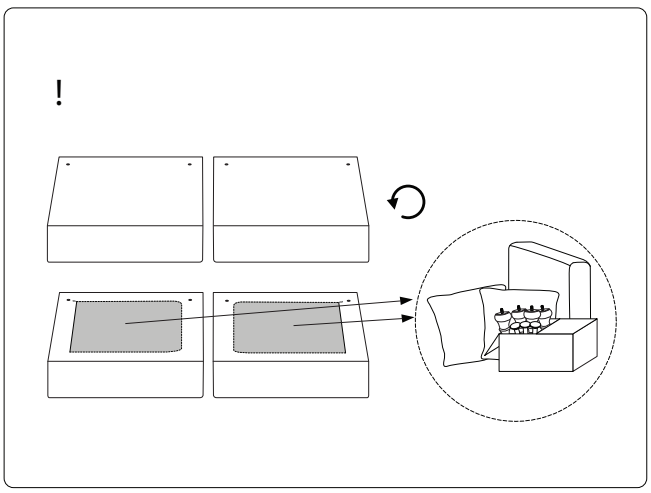

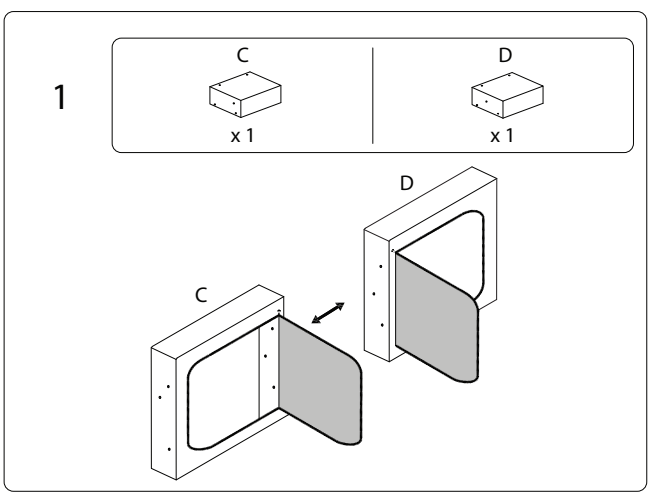

3/7

2

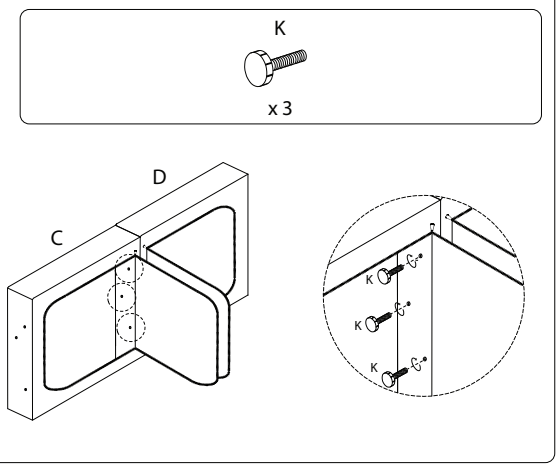
K
x 3
D
C
K
K
K

4

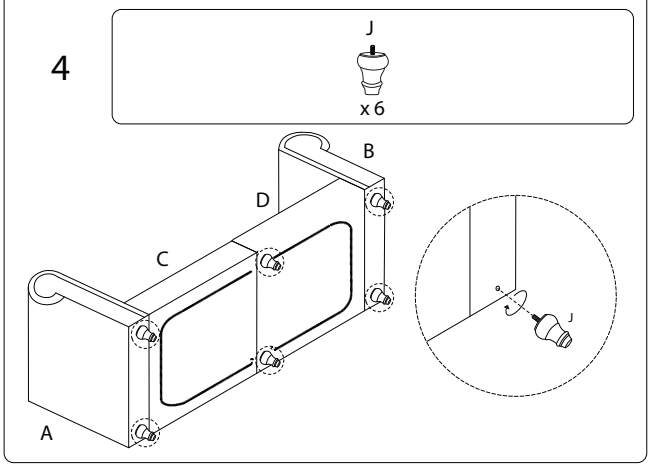
J
x 6
B
D
C
J
A

3

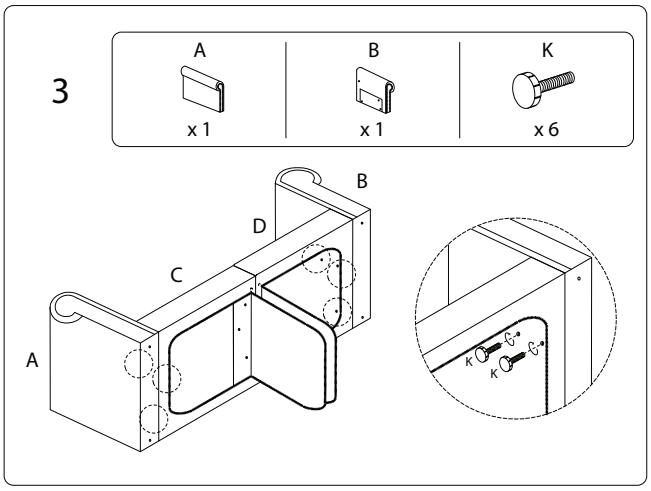
A
x 1
B
x 1
K
x 6
B
D
C
A
K
K

5

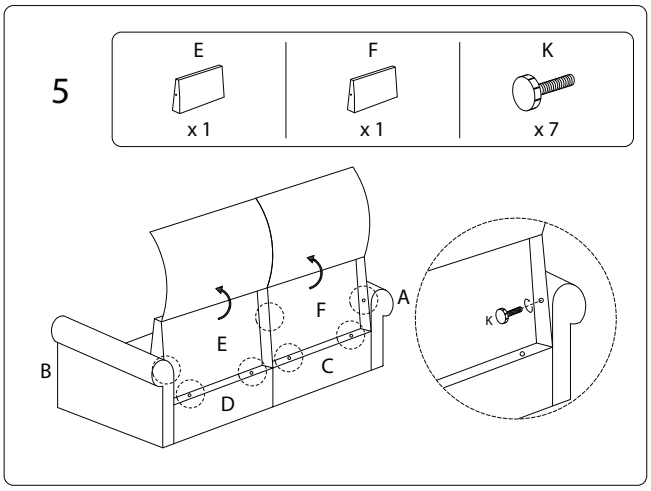
E
x 1
F
x 1
K
x 7
A
F
E
C
B
D
K

6

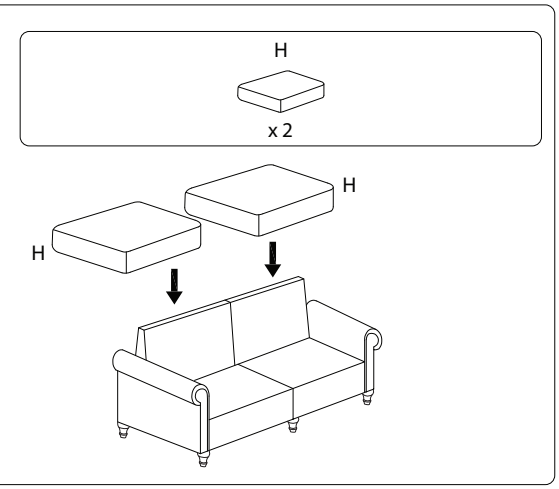
H
x 2
H
H

8

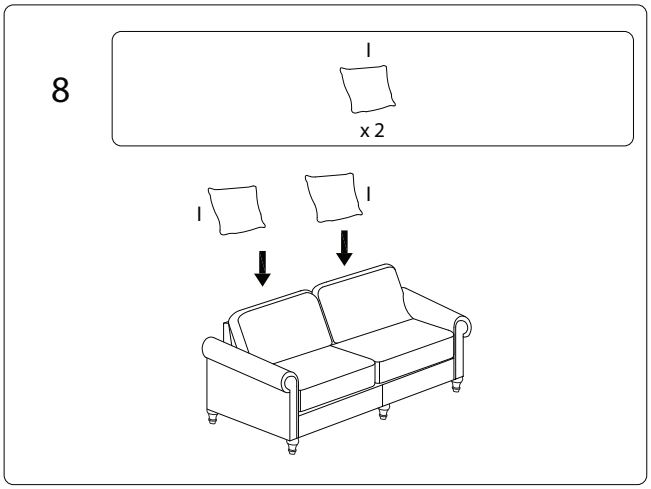
I
x 2
I
I

7

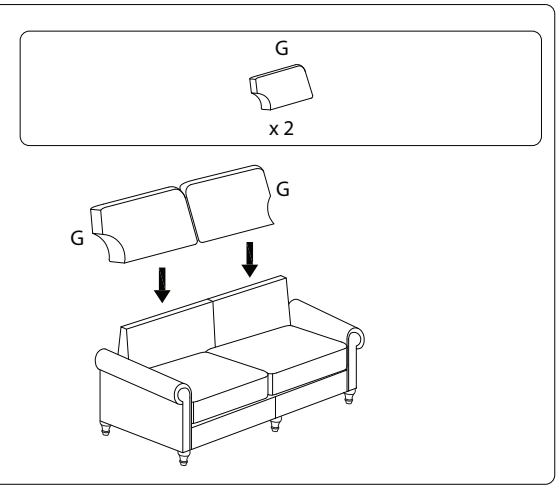
G
x 2
G
G